Current Sensing Solutions for Power Supply Designers

By Bob Mammano

ABSTRACT

While often considered a minor overhead function, measuring and controlling the currents in a power supply can easily become a major contributor to the success or failure of a design. To aid in achieving optimum solutions for this task, this topic will review the many strategies for current sensing, describe the options for appropriate sensing devices, and illustrate their application with practical design techniques. The distinction between current control and fault protection will be explored and applied to various power supply topologies with emphasis on performance-defining characteristics.

CURRENT SENSING IN POWER SUPPLIES

While it would be easy to classify the design of the typical power supply as a voltage regulation problem, experienced designers recognize that very high up on any priority list of tasks are issues related to the measurement and control of current. And, as it turns out, these are usually where more of the difficulties lie. At the risk of being too philosophical, let me suggest that the measurement of voltage is a "passive" activity in that it can readily be done at almost any place in the system without affecting performance. Current measurements, however, are "intrusive" in that we have to "insert" some type of sensor and, in so doing, run a greater risk of affecting the system we are trying to monitor or control. Which is, of course, justification for this topic in which we will attempt to present a compendium of current sensing devices, techniques and applications as an aid to designers of a broad range of power systems.

There are many reasons for monitoring current in power supplies, and as many or more uses to make of the information once obtained. At least three of these which will be discussed herein, pertain to the use of current sensing for fault protection, for current-mode controlled voltage regulation, and for commanding current as a goal in itself. In all of these current sensing applications, there are many issues facing the designer. Among these include:

- The need for AC or DC current information
- Average, peak, RMS, or total waveform of the current
- Isolation requirements
- Acceptable power losses in the measurement process
- Accuracy, stability, and robustness
- Bandwidth and transient response
- Mechanical considerations
- Implementation cost

Since there has been no published report thus far of any single current monitoring approach which is clearly superior in all the aspects given above, an important task in any new project is to prioritize the requirements as each options will have its strengths and weaknesses in satisfying this list of issues. With these characteristics in mind, let us first look at some of the possibilities in measuring current.

SENSING AND MEASURING CURRENT

RESISTIVE SENSING

Discrete Resistors for Current Sensing

In almost all cases, current sensing means developing a voltage signal which is representative of the current flowing at the particular place of interest in the circuit. Thus, a current sensing resistor should be considered as a current-to-voltage converter which, in order to perform its function, must be selected on the basis of a set of attributes such as the following:

- Low value in order to minimize power losses ($R_{cs}<1\ \Omega$ for this discussion)
- Low inductance because of high di/dt
- Tight tolerance on initial value and low temperature coefficient for accuracy
- High peak power rating to handle short duration high current pulses
- High temperature rating for reliability

Low value resistors in today's market consist of wirewound, thick film, thin film, metal element, and perhaps even other technologies. They come in a wide variety of form factors including axial and vertical through-hole mounted, power and chip surface mounted devices, two terminal and four terminal (Kelvin), on metallic or alumina substrates, and some with integral heat sinks. Representative samples of this variety are pictured in Figure 1. The following discussion is offered as an aid to understanding some of the considerations in selecting and applying these devices to perform the function of current sensing.

Value - The first criteria in determining a sense resistor's value is often the voltage threshold of the following circuitry which is going to operate on the sensed current information. The simpler IC controllers, for example, will have a defined voltage range for current sensing, or a specific threshold for initiating over-current protection, and the value of the sensing resistor is then uniquely defined by the value of the current to be measured. In more sophisticated applications where some signal amplification is available, the choice would be made on the basis of minimizing the voltage drop across the sense resistor.

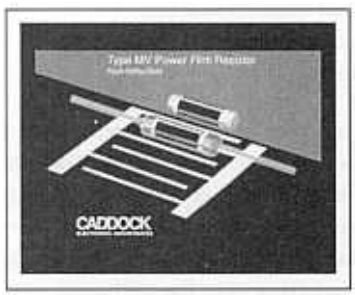

Caddock Electronics' Type MV Power Film Resistor. Design uses interdigitated non-inductive terminations. Power ratings from 1.5W to 10W

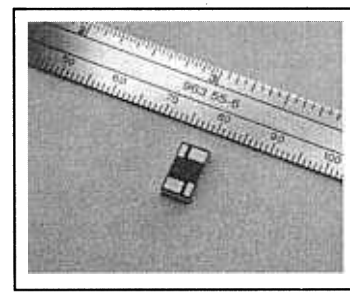

Isotek's PMA, PMD Surface Mount four terminal package, 10mm x 6mm x 1.5mm. Resistance down to 3mΩ, with <30ppm/°C TCR

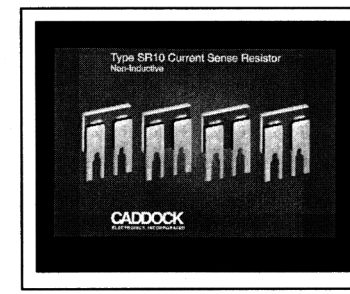

Caddock Electronics' Type SR10 Current Sense Resistor. Kelvin connection vertical mount 1W non-inductive design. 0.008W to 1.0W, 1% standard tolerance.

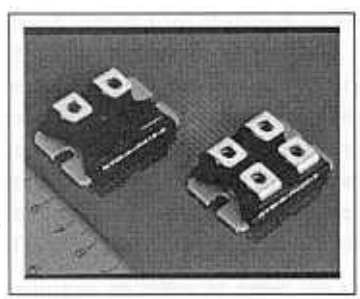

Isotek's RTO Heat Sink Base Mount two and four terminal configurations. Uses TO-238 package and screw terminal connections. Rated to 50W with <50ppm TCR and <2nH inductance

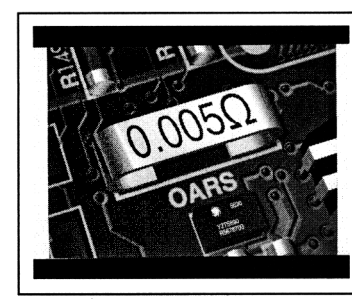

IRC's OARS series Surface Mount sense resistor. As low as 5mΩ standard, rated at 1W with <30ppm/°C TCR. Mounting configuration minimizes TCR of copper leads

Figure 1 A sampling of commercially available current sensing resistor products.

This process may be driven by the voltage itself - as in low headroom regulators, for example - or by power loss considerations stemming from either thermal requirements or efficiency goals. In either case, minimizing the voltage drop requires a trade-off study as there is almost always an accuracy or cost penalty incurred. For example, amplifier or comparator input offset voltage variation represents a fixed range of ambiguity which becomes an ever more significant variable as the sense voltage is reduced. Other errors which might not be noticed with higher voltage drops include losses in contacting the sensing resistor and, potentially, even the effects of thermal EMF generation at the connections.

Another important consideration relative to resistor value is the variability of resistor materials chosen by the various manufacturers of these devices. These low values of resistance demand specialized materials and the manufacturers have responded with a wide range of proprietary formulations, all with variations in their characteristics. Even within a particular part type from a particular manufacturer, different resistor values may be made with different materials with resultant differences in performance. This is an important point and will be illustrated further in the discussion which follows.

Power Rating - This parameter is often the driving indicator for selection of the proper technology for a sense resistor. An important part of the power considerations is an understanding of the nature of the current waveform to be experienced. The device may be intended to sense a DC current but may also need to survive - or perhaps even measure - transient peak currents caused from PWM switching, output capacitor charging, inrush current surges, load transients, short circuit peaks, and random externally caused surge currents.

Data on steady state power dissipation capability is most often supplied as a curve giving allowable power rating versus ambient temperature, where the curve is designed to manage the temperature rise in the resistor. Figure 2 gives an example of a typical derating curve for a sense resistor making note of the temperature limitations of the PC board under the resistor and the melting point of the solder used to connect to it. Note that these derating curves are unique to the style of resistor, its value, its material, and its mounting configuration.

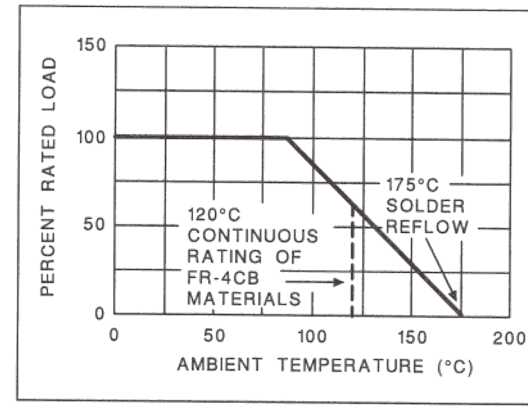

Figure 2 - A typical power derating curve for a current sense resistor

Peak or pulsed power capability is a function of energy (watt-seconds) because it is energy which creates heat, not just power alone. Peak power can therefore be hundreds or thousands of times higher than steady state power as long as the pulse duration is limited. An example of this is shown in the curves of Figure 3 which describe a one-watt surface mount device from IRC which can have a pulse power rating of up to 40 watt-seconds. (Note that the discontinuity in the curve is due to a material change at 0.015Ω.)

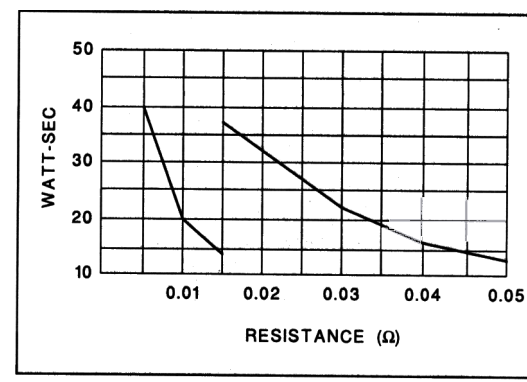

Figure 3 - Pulse-power, or energy rating, for a one-watt IRC resistor series.

Some technologies and package options may limit the surge current rather than the power, due to limiting constraints on leads, wire bonds, or in the case of film devices, the rating of the film itself. This is an area where it is important not to make assumptions but to gather specific data from the supplier of the particular device proposed for use, and then to refine this information with measurements made in the unique environment and mounting arrangement of the proposed application.

Temperature Coefficient of Resistance - The TCR of a sense resistor is an important parameter when accuracy is required. All materials undergo a resistivity change with temperature but this change is different and unique to each. Moreover, it is typically non-linear and - particularly at the higher temperatures - can be either positive or negative as shown in the representative curves of Figure 4. It should be noted that manufacturers have come a long way with this technology and by combining various materials, and using unique processes, can now produce sensing resistors with TCR's as close to zero as most any designer would want. However, when a particular device has a finite and non-linear characteristic, the industry practice is to specify TCR as a linear relationship between specified temperatures, such as 20°C to 60°C, where 20°C is the reference temperature. Since current sense resistors often operate at temperatures substantially above ambient temperature, designers should be wary of TCR specifications which do not provide curves over their entire operating range.

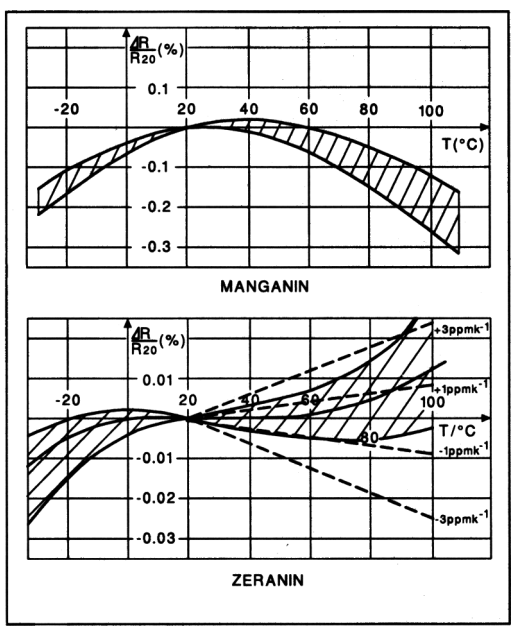

Figure 4 - Variations of TCR with temperature for two different materials produced by ISOTEK.

TCR is normally specified in units of parts per million per degree centigrade (ppm/°C) and can be translated into accuracy by using the formula:

$$\Delta R(\%) = (Toperating - Treference) \times \frac{ppm}{10^6} \times 100\%$$

In addition to the TCR of the resistor's element, low-valued sense resistors can experience an additional error caused by the much higher TCR of the copper connections. Copper has a TCR of +3900ppm/°C and to illustrate the impact of this, consider the resistor of Figure 5 which itself has a respectable TCR of 10ppm/°C but with one mΩ of total contact resistance (2Rcu), exhibits a much poorer performance according to the curve shown.

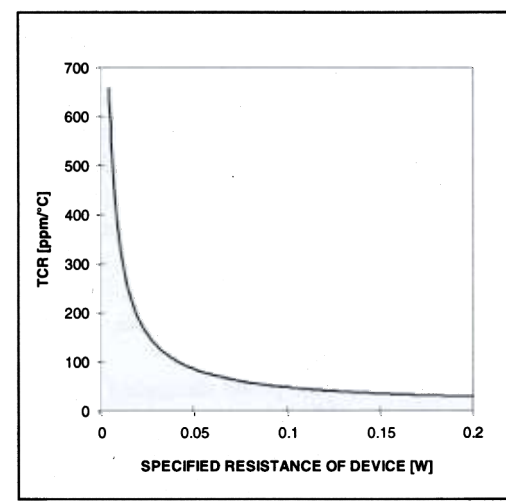

Figure 5 - The impact of contact resistance on total sensed TCR.

Four-Wire (Kelvin) vs. Two-Wire Resistors - A four-wire Kelvin resistor solves this problem (as well as the basic inaccuracy of contact resistance) by eliminating the error of the board trace, the solder connection, and the leads of the resistor itself, by bringing out two Kelvin sense leads as shown in Figure 6. As long as the measuring system presents a reasonably high impedance to the sense leads C and D, then the measured voltage drop is only that of the resistive element, and all the effects of contacting the resistor are bypassed. Clearly, this technique becomes almost mandatory at the higher current levels and many unique package solutions are offered with four contacts (see Figure 1).

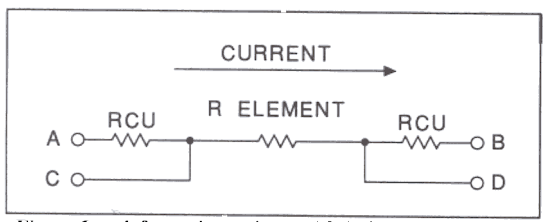

Figure 6 - A four-wire resistor with Kelvin sense leads.

The added accuracy of a four-wire connection comes at an a higher cost, however, as four-contact resistors are more costly, both to manufacture and to install. One economical compromise is to simulate a four-wire connection - as much as possible - with the printed circuit board layout as shown in Figure 7. The patterns are shown for use with either axial or SMD two-terminal resistors, and in either case, the technique is to define a pair of sense leads placed away from the high current path to exclude as much of the contact voltage drop as possible. While this approach is clearly not as good as using a true four-contact resistor, the error - particularly with surface mount metal strip devices - can be extremely small.

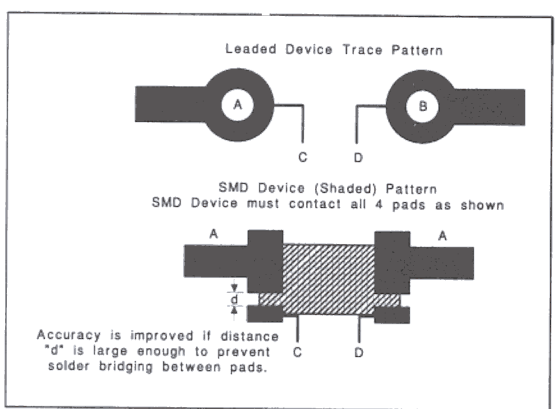

Figure 7 - Simulating a four-wire resistor using the PC board trace.

Paralleling Four-Wire Resistors - Occasionally, when very high power is required, paralleling Kelvin resistors may be an appropriate solution to distribute the heat. When this is done, it is worth noting that ballast resistors must be used in the sense lines to insure that these lines do not inadvertently conduct significantly higher currents than expected. Referring the schematic of Figure 8, and remembering that the whole point of the Kelvin contacts is because of the variability's of the contact resistance, without the ballast resistors, unequal currents through the contact resistances could equalize in the sensing elements by flowing through the interconnected sense lines which typically are not designed for high currents. The lower the Kelvin resistor value, the higher the error introduced by mismatched connections. The ballast resistor should be on the order of 1000 times the element resistance and can have a low power rating since its presence insures that any currents in these leads will be quite small.

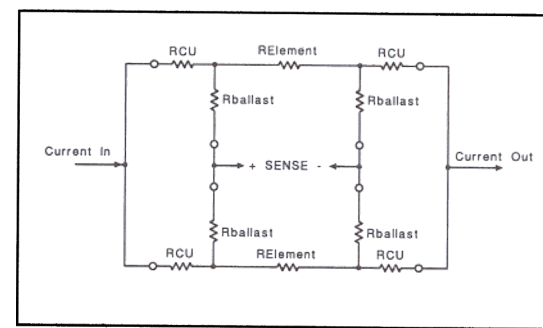

Figure 8 Using ballast resistors when paralleling Kelvin resistors.

Self-Inductance - A low inductance type of resistor becomes extremely important in any application where the current waveform can exhibit a high di/dt - an issue inherent in most switching power supply circuits. Any inductance in the resistor, when ex-

posed to a high current slew rate, will result in an inductive "step" voltage superimposed upon the sense voltage as shown in Figure 9. This may merely contribute an error or, more commonly, prematurely trip an overload-detecting comparator, or ring below ground and latch up the sense circuitry. Most sense resistors on today's market are manufactured with "non-inductive" techniques but it should be remembered that this is a subjective term and, the higher the current, the less inductance it takes to create problems.

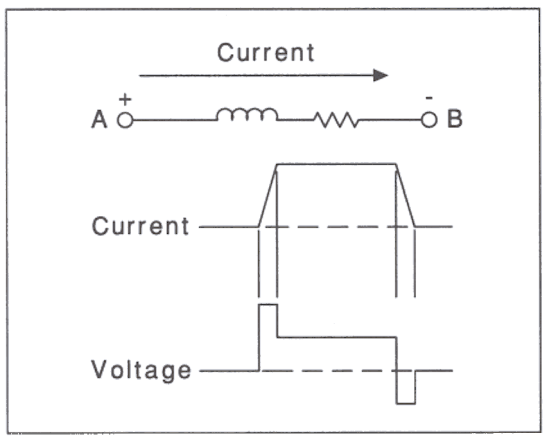

Figure 9 - Resistor inductance combined with high di/dt can cause voltage spikes.

Current Sensing With a Copper Resistor

Rather than add a separate component for current sensing, there is certainly an incentive for using the copper trace in a printed circuit board as a low-value resistor for this purpose. If we can accomplish this, not only will we - of necessity - suffer a smaller voltage drop and associated power loss, but now sensing current comes for free, saving all the costs associated with buying and installing a discrete resistor. But of course, there are difficulties, most notably that the resistance of copper is VERY low, meaning that the signal voltage will either be so small as to require relatively challenging amplification, or that the length of this resistor may add cost due to the PC board area required. This area usage is also impacted by the tolerances required of the resistor's value. While a narrow resistor pattern would decrease the length and thus also the area, PCB etch tolerances usually dictate a minimum width of 0.015 to 0.025 inches. Another difficulty is that copper has a temperature coefficient of 0.39 % / °C, meaning that the voltage drop for a given current will increase some 20% for a 50 °C temperature rise. However, for those applications where this technique is appropriate, the following design data is provided [1]:

The resistance of a metal path at a given temperature is governed by the equation:

$$R(T) = S(T)\frac{Length}{Width \times Thickness}$$

where S(T) is the basic resistivity of the material. For the normal copper used in PCB technology, its value is

$$S = 1.7241 \times 10^{-6}\ \Omega\text{-cm at } 20°\text{C}$$

and the more complete description is

$$S(T) = 1.7241 \times 10^{-6}\left[1 + 0.0039(T - 20)\right]\ \Omega\text{cm}$$

Since PC boards use sheet copper of a known thickness, it is helpful to divide the resistivity by the thickness (in centimeters) to obtain a Sheet Resistance, Rs, which now has the units of Ohms per square. The advantage is that now the resistor's design can be done in only two dimensions - length and width - which are the dimensions that the designer can control. For one-ounce copper, the thickness is typically 0.0036 cm, and the 20 °C value of a given resistor then becomes:

$$R(\text{in milliohms}) = 0.4789 \times \frac{length}{width}$$

where length and width can be in any units as long as they are the same. And, of course, two-ounce copper is twice as thick, so Rs is half the above value. Note that, as mentioned above, dimensional tolerances directly affect the resistor's value. Edge control of the PC etch process will usually define the minimum acceptable width, and one must always insure that a cost-cutting buyer doesn't allow a thinner copper sheet midway through a production cycle.

The use of a low value sense resistor implies that the current in the resistor may be quite high. A cop-

per etch on a PCB will self heat due to the power dissipated by the resistor. This temperature rise above ambient can be determined from the current and the total resistor area by using guidelines from MIL-STD-275E [2]. This information was used to generate Table 1 which provides the required dimensions for a 1oz PCB resistor given a maximum current and desired voltage drop. This data assumes a temperature rise of 30 °C above an ambient temperature of 60 degrees.

	Desired Voltage Drop			
	10mV	25mV	50mV	
AMPS	PCB Etch Length (in)			Width (in)
1	0.162	0.405	0.810	0.010
2	0.243	0.608	1.215	0.015
3	0.405	1.013	2.025	0.025
4	0.648	1.620	3.240	0.040
5	0.891	2.228	4.456	0.055
6	1.053	2.633	5.266	0.065
7	1.377	3.443	6.886	0.085
8	1.701	4.253	8.506	0.105
9	2.025	5.063	10.126	0.125
10	2.430	6.076	12.152	0.150
11	2.754	6.886	13.772	0.170
12	3.078	7.696	15.392	0.190

Table 1 - Dimension solver for given current and voltage based on allowing a 30 °C temperature rise above a 60 °C ambient.

Using an IC Leadframe as a Current Sensing Resistor

There is another approach to using copper as a current sensing resistor, exemplified by Unitrode's proposed UCC3926 Integrated Current Sensor, illustrated with the simplified block diagram of Figure 10.

This product takes the tack of integrating the sensing resistor with the amplification and level shifting circuitry normally required to develop a usable current signal. Since low-value resistance is not readily compatible with IC processing, a specially designed copper leadframe shown in Figure 11 is used to form the resistor. While the current to be measured must now pass through the IC package, the design of the sensor and it's signal-conditioning circuitry as an integrated product allows several benefits as listed below:

The custom leadframe design allows the safe conduction of as much as 20 Amps with a maxi-

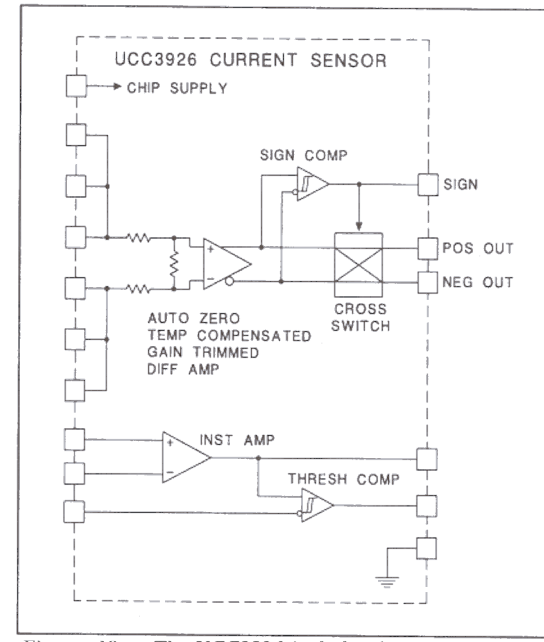

Figure 10 - The UCC3926 includes the current sensing resistor and the signal-conditioning circuitry together in a single IC surface-mount package.

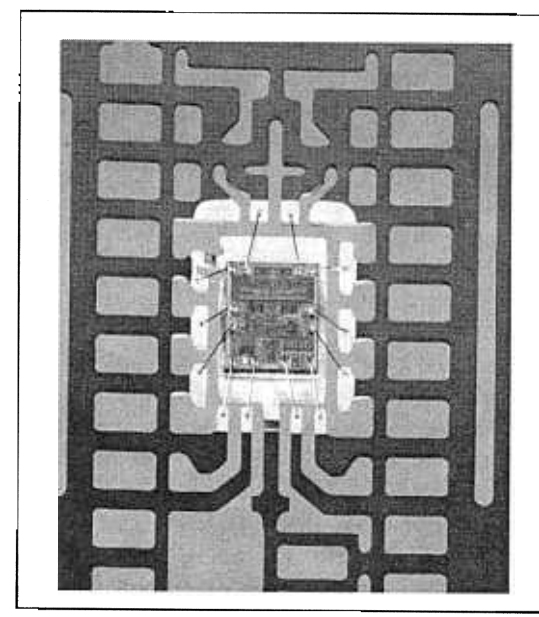

Figure 11 - A specially-designed leadframe for the UCC3926 forms the current sensing resistor.

mum total voltage drop of 30 millivolts, significantly minimizing both power loss and internal heating.

The leadframe resistor voltage drop is measured with Kelvin contacts provided by internal bonding wires.

A chopper-stabilized, high-gain, auto-zero amplifier is included to deliver a 0.5V signal from a 15A input current. The common-mode range of the sensor can be either at ground or at a positive voltage rail of up to 14V. Sensed current can be bi-directional.

The amplifier is trimmed after assembly to cancel the effects of both resistor tolerances and gain, as well as packaging induced shifts. This product is specified to measure current with an accuracy of ±2%.

The amplifier has built-in temperature compensation for the TC of the copper resistor and will tend to track any self-heating as the chip is mounted in the same package.

Using FET Drain-Source Resistance as a Sensor

With the successful utilization of power MOSFETs as the switching devices for the current we wish to monitor, and the recognition that a FET is a majority-carrier device with a fairly linear on-resistance, the prospect of using the Rds(on) of the FET as the current sensing resistor has gained recent interest. An illustration of this approach is shown in Figure 12 which shows a portion of the Unitrode UCC3582, a simple synchronous buck regulator, in which short circuit protection is provided without the need of a separate current sensing resistor. With this device, the drain-source voltage of the external high-side switch is monitored during the on-time of the switch, and a voltage greater than 450 mV will initiate pulse-by-pulse current limiting. While this is a very low-cost solution, one must recognize that the actual current threshold will vary with unit-to-unit variation of FET parameters, gate drive amplitude, and temperature. While these tolerances are probably too great to allow this technique to be used for accurate control, it may be perfectly acceptable if the only issue is survivability in a fault condition.

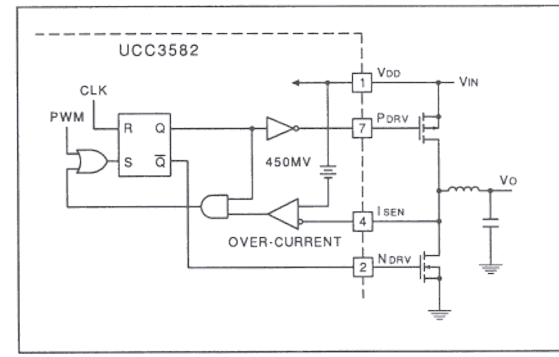

Figure 12 - The UCC3582 eliminates the need for a separate current sensing resistor by using the Rds(on) of the FET.

Using the Inductor as a Sense Resistor

Another interesting circuit idea for measuring current without a discrete sensing resistor has been proposed by Pacholok [3] and is particularly appropriate for low voltage power converters where a voltage drop of several hundred millivolts for current sensing would represent a significant efficiency loss. This approach, illustrated with a boost converter circuit in Figure 13, recognizes that the voltage drop across a power inductor consists of two parts:

1. $V_L = L\frac{dI}{dt}$

2. $V_R = I \times R$

where the "R" is the copper resistance of the inductor's winding. These two voltages add to form the total voltage across the inductor, VT. By adding a closely coupled second winding with an equal number of turns, but with minimal current loading, this winding will have only VL across it. By then summing the voltages from the two windings such that the VL terms cancel out, one is left with only VR, a voltage determined by the inductor current, and the appropriate signal for a current-mode control loop. A simple current mirror circuit will convert this differential VR term to a single-ended, ground-referenced signal compatible with the current sensing pin of a UC3842 or similar device.

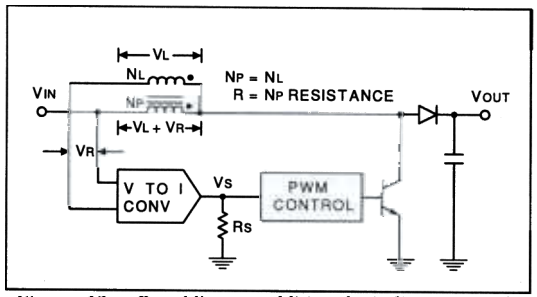

Figure 13 - By adding an additional winding, the IR drop in the inductor can be used for current sensing.

While this technique has saved the power loss and cost of an additional current sense resistor, recognize that the resistance which is used is the copper wire in the inductor and the temperature coefficient of copper's resistivity applies. There may also be some inaccuracies as the current signal is a small voltage derived as the difference between two much larger voltage signals.

MAGNETIC SENSING DEVICES

Ever since it was discovered that a current flowing in a conductor generated a magnetic field, there were techniques developed to use that field as a way of measuring the current which created it. It should be obvious that one of the more significant benefits of using magnetic coupling for sensing current is the electrical isolation which this achieves. Clearly, the most popular and practical application of this approach is embodied in the current sensing transformer, but before discussing this component, it may be useful to review some other techniques which have been used to determine a current's value from its associated magnetic field.

The Rogowski Coil

One of the earliest current transducers was the Rogowski Coil, first described in 1912 and illustrated in Figure 14. [4][5]

This device consists of a single-layer coil, uniformly wound on a non-magnetic core which is either flexible or formed into a circle which surrounds the conductor of the current to be measured. The terminal voltage of this coil will be

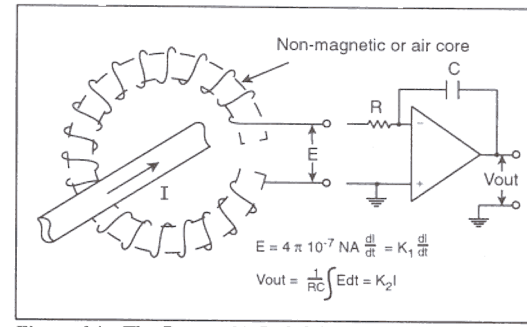

Figure 14 - The Rogowski Coil delivers a terminal voltage proportional to the rate-of-change of the current passing through its loop.

$$E = \mu oNA\frac{dI}{dt}$$

where μ o is the permeability of free space, N is the number of turns/meter of the coil, A is their cross-sectional area in square meters, and I is the current passing through the loop. This expression for the voltage can then be written as

$$E = K_1\frac{dI}{dt}$$

with K1 now defined as the coil sensitivity with units of Volt-sec / Amp.

To reproduce the current waveform as a voltage, an integrator such as shown in the above figure will generate

$$Vout = \frac{1}{RC}\int$$

if we define K2 as K1 / RC.

Practical implementations of this technique typically also incorporate a low-frequency roll-off to eliminate thermal noise and drift. Since the transducer is not able to reproduce the DC component of the current, it operates in a manner similar to the AC input of an oscilloscope.

The major benefit of a Rogowski Coil is that since the core is effectively air, there is no magnetic material to saturate and the coil's output remains lin-

ear for extremely high peak currents. This device is still used today for measuring high-energy current pulses or transients with high-frequency harmonic content since the upper bandwidth can extend into the megahertz range.

Current Transformers

With the availability of magnetic core materials, it could have been a simple but very significant extension of the Rogowski Coil technology to replace the air core with a material which concentrates the magnetic flux inside the coil. With the flux contained within the coil instead of passing through it, a direct relationship between the coil current and the current in the conductor generating the field was achieved and the current transformer was born. The similarities in the structures can be seen in the sketch of a current transformer shown in Figure 15, but with the coil now terminated with a low impedance, the induced voltage becomes irrelevant and the output voltage is instead determined by the coil current and the load resistance. [6]

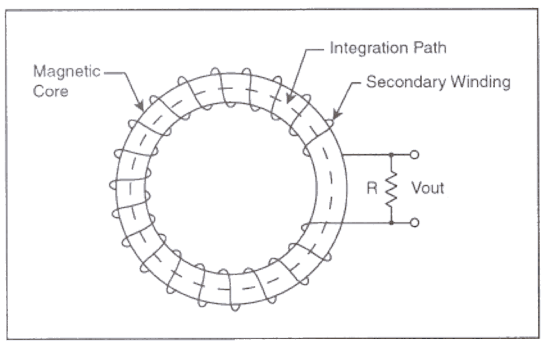

Figure 15 - A terminated current sense transformer will provide a voltage signal directly related to primary current.

Current sense transformers, of course, provide two important benefits over simple resistive sensing - isolation between control and power and lower power losses. The lower power dissipation of a current sense transformer allows a much higher signal level, significantly improving the signal-to-noise environment of the control system. The fact that a current sense transformer cannot work with DC currents is usually not particularly troubling when used in switching power converters where the currents are repetitively interrupted, allowing time for transformer reset.

The current sense transformer operates the same as any transformer, with the exception that the primary signal is a current. In a typical switching converter application, the primary winding will consist of a single turn, with the secondary turns providing the current attenuation. The primary-to-secondary current relationship is given by

$$\frac{Is}{Ip} = \frac{Np}{Ns}$$

and the resultant output voltage is defined by the load resistor, Rcs, as

$$Vo = Rcs\left(\frac{Np}{Ns}\right)$$

The equivalent model for a current sense transformer is usually as shown in Figure 16 where, in addition to the primary and secondary turns, the magnetizing inductance and interwinding capacitance have been added to the secondary.

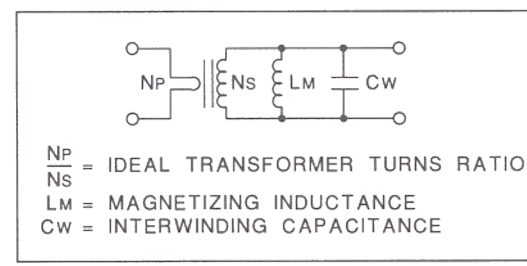

Figure 16 - The typical electrical model for a current sense transformer.

Core Issues - The current in the primary is transformed to the secondary, but the transformer must be excited through the action of the magnetizing current. The magnetizing current is supplied by the primary and is therefore subtracted from the current available to drive the secondary. This leads to one of the design criteria for the transformer - low magnetizing current - achieved by providing a large magnetizing inductance. Additional requirements are typically high saturating flux density, low core loss, and, of course, small size and low cost.

In most high frequency applications (f > 50kHz), ferrite will be a good choice for the core material, but at least one alternative is a Ni-Fe tape wound core. Materials such as Supermalloy have very high permeability and saturating flux density compared to ferrites. Their permeability rolls off with frequency, however, which gives the advantage to ferrite at frequencies above 50kHz. Tape wound cores also tend to be more expensive than ferrites for the same core size. On the other hand, tape wound cores can still be cost effective at low frequencies where their higher permeability and saturation level may allow for a much smaller core than would be required if ferrite were used. Common choices for ferrite include type J or W materials from Magnetics, Inc. or H5B2 from TDK.

Current sense transformer cores are almost always toroids. This shape minimizes leakage inductance and there is no loss of permeability due to an air gap which would be unavoidable with any type of cut core configuration. Toroids are normally more expensive to wind but this disadvantage is minimized with a single turn primary and the availability of many "off-the-shelf" standard designs. An example of a simple high-frequency current sense transformer design is shown in Figure 17. [7][8]

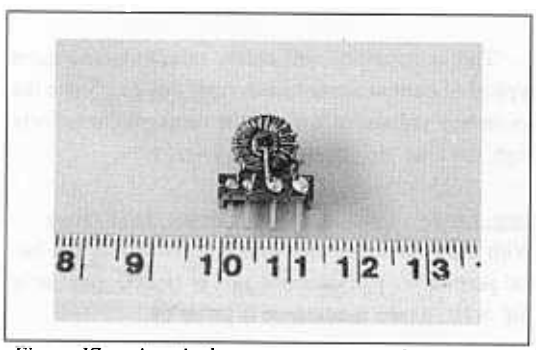

Figure 17 - A typical current sense transformer applicable to switching power supplies - Courtesy of Pulse Engineering, Inc.

Current Sense Transformer Design Procedure

To illustrate a typical current sense transformer design process, the schematic of Figure 18 will be used. Since the transformer is transforming current - with zero voltage on the primary - the secondary winding needs a resistor, Rcs, to convert the secondary current to a voltage adaptable to the needs of the following current control circuitry. The purpose of the diode is to allow the transformer's magnetizing current to induce a high reverse voltage on the secondary when the primary current goes to zero in order to provide a fast reset for the transformer's core, and also to isolate this negative reset voltage from the control circuit.

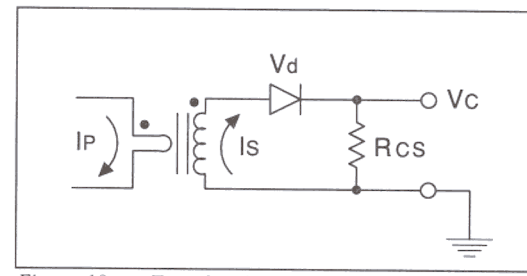

Figure 18 - Transforming primary current to a control voltage.

Step one - Determine the Turns Ratio - Usually the design begins after the rest of the converter circuitry has been defined. Initial parameters such as the maximum secondary voltage are usually determined by the control circuit. For example, if using the UC3842 Current-Mode PWM Controller, the maximum current input signal is 0.9 Volts. If we allow a 20% margin for current limiting, the maximum operational signal, Vc, becomes 0.7V. Similarly, the turns ratio is usually constrained by the desired secondary voltage, the primary current, and the need to keep the control circuit power to a minimum. A reasonable goal might be to keep the power dissipation in the sense resistor to less than 62mW (so a 1/8W resistor could be used). (Purests will note that we are using peak values where accuracy would dictate the use of rms, however the simplification is easily justified and could be corrected if needed for a critical design.) If the maximum primary current was to be 5 Amps, and the full-scale secondary voltage is 0.7V, then two equations in two unknowns can be written as

$$Is^2 Rcs = 0.062\text{Watt}$$

$$IsRcs = 0.7\text{Volt}$$

Solving these equations yields Rcs = 7.9 ohms. Once the sense resistor is determined, the secondary current and hence the turns ratio can be calculated by

$$Is = \frac{0.7\text{V}}{7.9\Omega} \approx 89 \text{ mA}$$

$$\frac{Ip \times Np}{Is} = \frac{5\text{A} \times 1\text{T}}{89\text{mA}} = 56 \text{ turns}$$

A comment here about turns ratio. As the secondary turns go up, the magnetizing inductance will increase, thereby reducing the error, and the power dissipation will go down, but the interwinding capacitance will tend to increase. However, it is often desired to use a standard, off-the-shelf transformer. Common turns ratios are 50:1 and 100:1 and, although it might make for a slightly higher resistor dissipation, to keep this example simple we will choose a turns ratio of 50. This gives a secondary current of 100mA (5A/50) and to maintain the same control voltage of 0.7V, the resistor value will be reduced to 7Ω.

Step Two - Calculate the Wire Size - As a first cut, a current density of 500 A/cm^2 can be used. Remember, the real parameter of interest is the power dissipation, or how much power loss can be tolerated in the windings. Once you've determined the wire diameter, pick a core that can handle the copper area.

Returning to our example, if the primary current is 5A, the wire size required is

Wire cross-section area

$$= \frac{5\text{A}}{500 \text{ A/cm}^2} = 10 \times 10^{-3} \text{ cm}^2$$

which corresponds to 17 AWG wire size. Typically, this is a single turn and therefore the total resistance will be quite small. A smaller wire size could be used. The secondary wire size is

$$\frac{5\text{A}/50\text{T}}{500 \text{ A/cm}^2} = 200 \times 10^{-6} \text{ cm}^2 / \text{turn}$$

which can be met with 33 AWG wire. The total copper area is then

$$\text{Area (total)} = 50\text{T} \times 0.2 \times 10^{-3} + 1\text{T} \times 10 \times 10^{-3}$$
$$= 20 \times 10^{-3} \text{ cm}^2$$

and if we use a fill factor of 0.4, a core with a window area of 50×10^{-3} cm^2 would be appropriate, such as a Magnetics, Inc. Core Number 40601. This core has a cross-sectional area, Ae, of 0.21 cm^2 and an effective path length, ℓm, of 1.3 cm.

Step Three - Calculate Flux Density - The concern here is to insure that the core will not be driven into saturation. Using Faraday's law and assuming switching frequency of 200kHz (5 usec total period) and a maximum duty cycle of 40%, we can calculate the maximum flux density as

$$B = \frac{(Vc + Vdiode) \times ton}{Ns \times Ae} \times 10^8$$

$$= \frac{1.4\text{V} \times 40\% \times 5\text{usec}}{50\text{T} \times 0.21\text{cm}^2} \times 10^8 = 27 \text{ Gauss}$$

This is certainly well below saturation and quite typical of current sense transformer design. Since the secondary voltage is low and the turns ratio relatively high, the flux density should be low.

Step Four - Calculate Magnetizing Inductance - With the knowledge that with type W ferrite, the initial permeability of the core, μo, is 10,000 (and μr is $4\pi \times 10^{-8}$), the inductance is given by

$$Lm = \mu o \times \mu r \times \frac{Ns \times Ae}{\ell m \times 100}$$
$$= 10^4 \times 4\pi \times 10^{-8} \frac{50\text{T} \times 0.21\text{cm}^2}{1.3\text{cm} \times 100\text{cm/meter}}$$
$$= 1\text{mH}$$

From this, the peak magnetizing current can be calculated as

$$\text{Im} = \frac{(Vc + Vdiode) \times ton}{Lm} = 2.8\text{mA}.$$

This current loss means that the transformer error will be

$$\%\ error = \frac{\text{Im}}{Is} \times 100 = 2.8\ \%.$$

Since the magnetizing current is assumed to start at zero and increase with the duration of the primary current pulse, this error represents the droop in the current waveform as it appears on the secondary and the above calculation is the maximum value which is reached at the end of the pulse.

Step Five - Reset Voltage - The last step is to determine the reset voltage required after each current pulse. The cardinal rule of magnetics is that the volt-seconds must be equal. Therefore,

$$Vreset \times toff = (Vc + Vdiode) \times ton$$

Rearranging terms, we can calculate the reset voltage which will appear as

$$Vreset = (Vc + Vdiode)\frac{ton}{toff}$$
$$= (0.7 + 0.7)\ 40\% / 60\% = 0.93\text{V}$$

For this example, the reset voltage of less than 1V illustrates why, in most DC/DC converter applications, core reset is not a problem. If we were to extend the maximum duty cycle to 95%, this example would still only require a reset voltage of 27V. In the typical application with a diode in series with the transformer's secondary, one might assume that the theoretical reset voltage would be determined by the breakdown voltage of the diode as the magnetizing inductance will force the flow of magnetizing current somewhere in the secondary circuit when the primary current is interrupted. This high voltage would, of course, make the reset time extremely short but there could be some reliability concerns. In actuality, however, instead of breaking down the diode, the magnetizing current will flow into the interwinding capacitance and through the reverse recovery of the diode to the sense resistor. While an additional resistor could be placed across the secondary winding to limit the maximum voltage, with these existing paths, it is usually unnecessary and serves only to further lengthen the reset time. Another possible solution, if needed, is the use of a zener as the rectifying diode

This issue of reset time and/or voltage ***can*** become important in applications where the duty cycle can approach 100%. In boost converters at startup, and power factor controllers where the duty cycle attempts to go to 100% with every zero-crossing of the power line, reset time can become critical and definitive steps may need to be taken to limit the maximum duty cycle to something less than 100% in order to keep the current sense transformer from saturating. Saturation, if it does occur, can be a serious problem in a current control application as it will cause the sensed current signal on the secondary to diminish which, in turn, signals the control circuit to force more current, which can lead to catastrophic results.

DC Current Transformers

Wouldn't it be nice if we could combine the low power loss and isolation of the current transformer with the ability to accurately measure DC currents as accomplished with the shunt resistor? Actually, several solutions for a "DC transformer" have been proposed in the past, one of which is shown in Figure 19. [9]

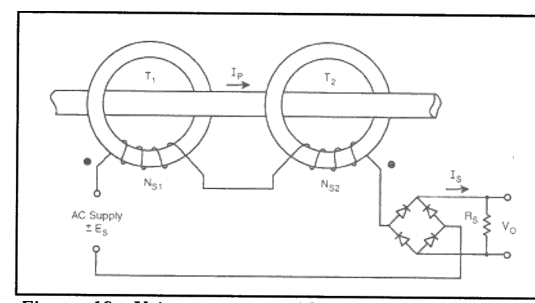

Figure 19 - Using two cores with an AC excitation voltage applied so that the magnetic fields cancel, implements a transformer with isolated, accurate response to DC current.

This transformer uses two cores with an AC excitation voltage applied to generate opposite-polarity flux excursions in each core. Using square-loop cores such as permalloy 80 or a high-frequency fer-

rite, the excitation voltage will drive the cores into and out of saturation with opposite polarities at each half-cycle. A simplified illustration of the operation on the B-H curves for each core is shown with the two curves superimposed in Figure 20. The set and reset points are determined by the excitation voltage on the two secondary windings connected in series, but offset by the operating point defined by the primary current common to both cores.

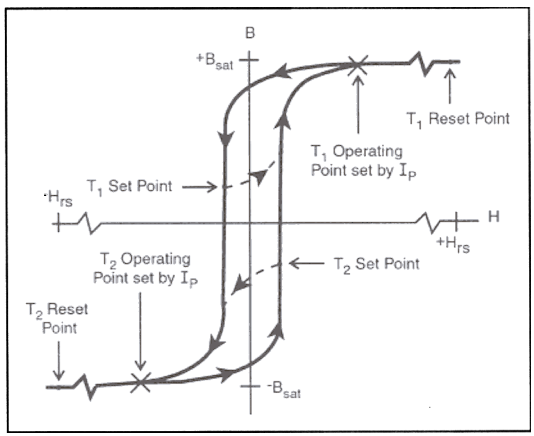

Figure 20 The B-H Loop operation of the DC current transformer.

As each core alternately comes out of saturation, the changing flux induces a current in the secondary proportional to that flowing in the primary. This operation is best visualized with the aid of the time-based waveforms of Figure 21.

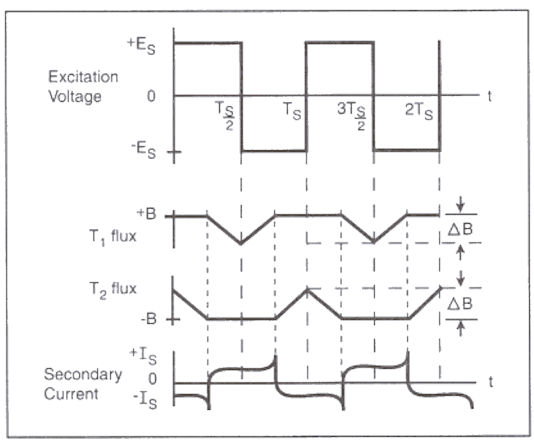

Figure 21 - The offset operating points of the two cores allow the excitation voltage to pull each core alternately out of saturation to induce a secondary current.

The waveforms for this example are shown with squarewave excitation although the technique was initially described by Storm [10] for use with sine waves. And, of course, it should be obvious that this transformer will work with primary currents in either direction. The secondary signal is rectified and the result is a DC current directly related to the absolute value of the primary current by the turns ratio. Importantly, this transformer can be made quite accurate as, to a first order, excitation voltage levels, loading, temperature, and core characteristics do not enter into the equations. Of course, in today's technology, the limited high frequency capability of magnetic cores do represent a serious restriction for applicability to switching power supplies.

However, Severns [11] has taken this approach one step further, with potential applicability to high frequency switching power supplies, with his design of a unipolar version of this function using a single core as shown in Figure 22.

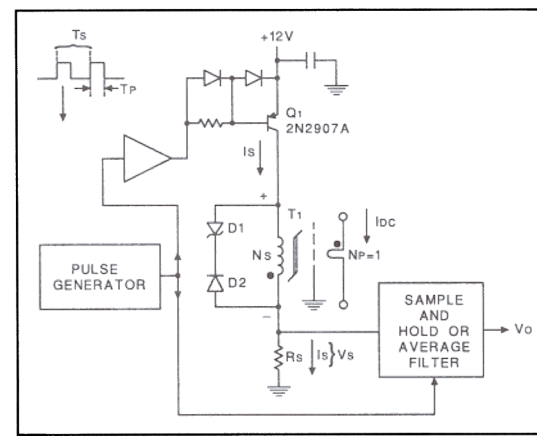

Figure 22 - A unipolar DC current sensor with high-frequency capability can be built with a single core.

The operation of this circuit is as follows:

The pulse generator is run with a very short duty-cycle - typically less than 10%. While it is in the off state the switch, Q1, is open and the primary current, at any value above some minimum, will hold the core in saturation and there will be no secondary current.

2. When the pulse generator is on, Q1 closes and the reversal in voltage across the secondary allows the core to come out of saturation with a current Is = Ip / Ns. At the same time, Vo is developed by sampling the voltage on Rs caused by Is.

This circuit could potentially operate with sampling frequencies up to the megahertz region, allowing reasonable resolution of current waveshape with a bandwidth in excess of 100 kilohertz. An additional benefit is that the low duty-cycle of the excitation voltage acts as a multiplier to the turns ratio and allows very high primary current without a corresponding number of secondary turns. [12]

HALL SENSORS

Another element with potential application for sensing DC current with electrical isolation is the Hall-effect sensor, a device which is currently produced in silicon as a semiconductor component where a certain amount of interfacing circuitry can be integrated along with the sensing device into a single silicon chip. The Hall-effect principle is that a voltage will be produced across a current-carrying semiconductor material under the influence of a magnetic field. This principle is illustrated in Figure 23 by observing that current I flowing from bottom to top in the Hall device is deflected at right angles to an imposed magnetic flux B, generating an induced voltage V across the device. [13]

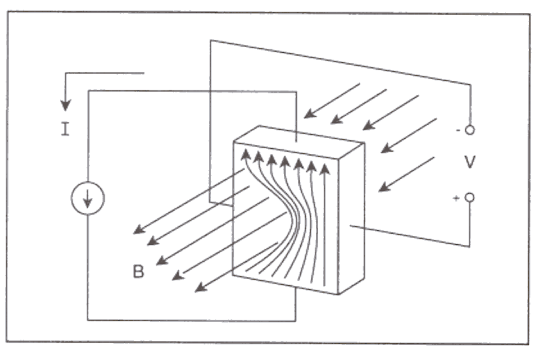

Figure 23 - A Hall-effect sensor develops an output voltage by the modulating effect of a magnetic field on a bias current.

The basic relationship describing the output voltage from a Hall sensor is

$$V_H = K_H \times I \times B$$

where I is the bias current through the sensor and B is the magnetic flux passing through it. K_H is a coefficient defining the sensitivity of the sensor and it includes both the electron mobility and resistivity of the semiconductor material as well as the geometry

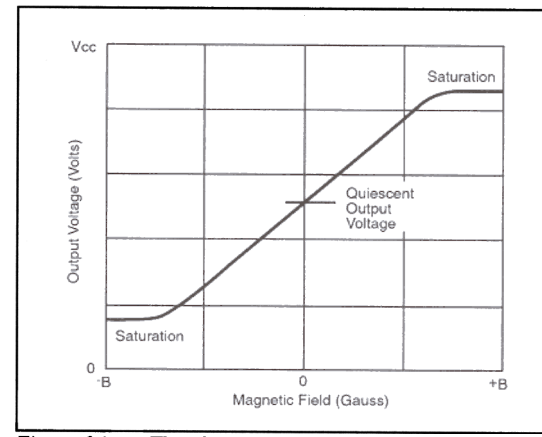

Figure 24 - The characteristic curve for a Hall sensor designed for linear applications.

dimensions of the particular sensor design. Most sensor devices used for linear applications today include added integrated circuitry to develop the bias current and provide a differential amplifier for the output voltage. It should be noted that the discussion herein will be limited to linear current sensing applications and excludes switching and position sensing uses - by far the biggest markets for these devices. Linear devices are typically bi-directional with a characteristic transfer function as shown in Figure 24. Depending upon the particular design, this curve can show a linear output voltage from zero to five volts with a flux excursion of + to - 1000 Gauss.

On first glance, a Hall device would look like the perfect answer to a current sensing problem. It is a small-sized, low cost device with a linear response to a magnetic field, capable of measuring DC currents, and with inherent isolation capability. The problems

all show up in the fine print, and include the following:

The sensitivity is low, unusually requiring some form of "concentrator", which adds costs.

Mechanical positioning can be tricky and may also add manufacturing costs.

The range of linearity is limited, and there is often an offset at zero current.

The devices are sensitive to mechanical stresses and ambient temperature variations, as well as unit-to-unit tolerances.

The sensing element has a large junction capacitance which typically limits the maximum frequency response to 20 - 40 kilohertz.

While isolated from the current they would measure, these sensors do require some form of power supply for their own consumption.

However, within these confines, practical solutions have been found. Some of these are outlined in the following examples.

The simplest approach would be to just place the Hall sensor against the conductor containing the current to be measured. However the value of the flux level at this point is defined, from Ampere's Law, by

$$B = 0.2 \times \frac{I}{R}$$

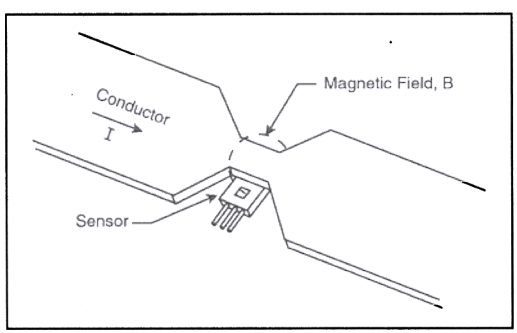

Figure 25 - By reducing the area of the conductor, the Hall sensor can be placed close enough to the center to be usable as a current sensor in the 100 - 500 Amp range.

This expression is for a round conductor where R is the distance in centimeters from the center of the conductor to the point of sensing, I is the current in Amps, and B is the flux density in Gauss. The practical limitations of this equation are easily seen in that the flux density from a current of 100A would only be 100Gauss at 0.2 cm from the center of the conductor. A high-current solution proposed by Rippel [14] is illustrated in Figure 25 where he necked down the cross-section of a flat conductor so he could place the sensor close to the center, while still keeping the resulting hot-spot within acceptable bounds.

For lower currents, some form of field concentrator will likely be required. Using a high-permeability core with a gap into which the Hall sensor can be placed allows usable flux densities to be achieved at much greater distances from the conductor's center. Figure 26 illustrates this technique. [15]

The next step for greater sensitivity at lower currents would be to reduce the size of the conductor and wrap multiple turns around the field-concentrating core as shown in Figure 27. While this may appear as an unacceptable complication, it should be noted that with a winding on a gapped core, we have created an inductor which, of course, could be the circuit inductor whose current we are trying to measure in the first place. The only issue is whether the thickness of the gap - which must be large enough to allow the Hall sensor to fit - is acceptable for the design of the inductor.

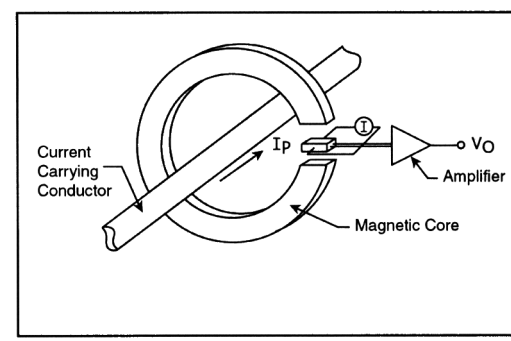

Figure 26 - Practical separations between the Hall sensor and the conductor can be achieved with a field concentrator made from a magnetic core.

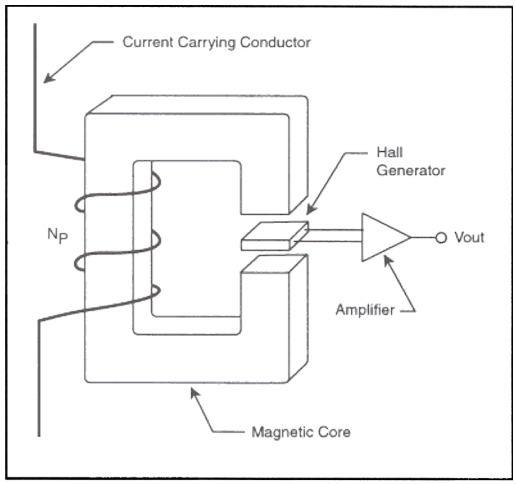

Figure 27 - The flux from the current to be measured can be further multiplied by adding turns to the core.

In the above applications, the Hall sensor is essentially operating as an open-loop input device and, as was stated earlier, the variability's and non-linearity's of Hall-effect devices contribute to a substantial inaccuracy in the resultant measurements. A technique for minimizing or eliminating much of this inaccuracy is to enclose the sensor in an overall feedback loop as shown in Figure 28. In this circuit, a low-current secondary winding is added to the core whose function is to develop a magnetic flux in opposition to that developed by the primary conductor. The feedback loop forces the total magnetic field within the core to zero and the current it takes to do this is turned into an output voltage by passing through a sense resistor as shown in the figure. By keeping the net flux at zero, most of the sensor tolerances are canceled and, in addition, the frequency response is also enhanced.

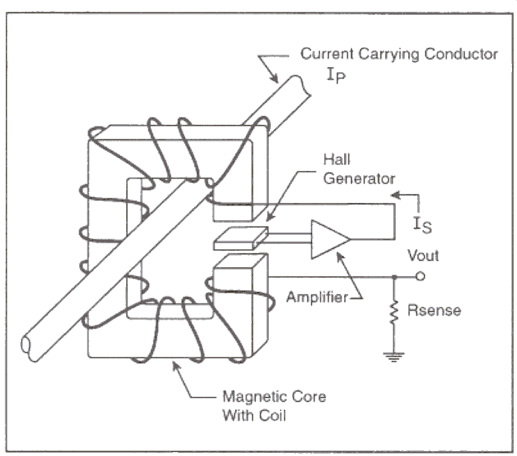

Figure 28 - With a secondary winding to cancel the primary field, accuracy and response of the Hall sensor is improved.

Before leaving the subject of Hall-effect current sensors, it might be interesting to mention an innovative application proposed by Carrasco, et al [16] in order to get an accurate current sensor with a bandwidth from DC to beyond several hundred kilohertz. This solution, which is illustrated in Figure 29, uses a core with a Hall sensor and three windings. The first is the primary and conducts the current to be measured. This, of course, could be a single turn. The second is the compensating coil used to linearize the Hall-effect device as described above. While this improves the response of the Hall sensor, it will still fall off at something less than 100kHz. The third winding forms a conventional current sensing transformer which, while unable to pass DC, has a good high frequency capability. This signal is then scaled and added to that of the Hall output for a resultant very wide bandwidth as shown.

SENSE-FET TECHNOLOGY

With the advent of power MOSFET technology, another alternative for sensing current in power sys-

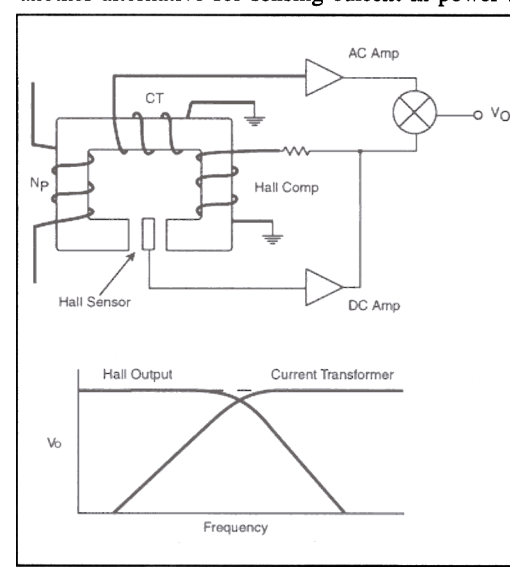

Figure 29 - This current sensing scheme uses a Hall sensor to add DC response to the high frequency capability of the current transformer, for a resultant broad bandwidth.

tems has become available. Since a power MOSFET is constructed with multiple source contacts which inherently have good current balancing between them, the current through one will match, according to their relative numbers, the current in all the others. So by bringing one source out of the package on a separate pin, the current in that pin will track that in the power source pin with a ratio that can be made accurate to within 3%. This current ratio is typically made in the range of 1000 to 1500 so that the power loss in the sensing circuitry is negligible. This device can best be visualized as two units in parallel as shown in Figure 30 where the sensing device has source area A while the power device has an area of nA. Note that the power source also includes a Kelvin contact to keep impedances in the power line from contributing to a mismatch error.

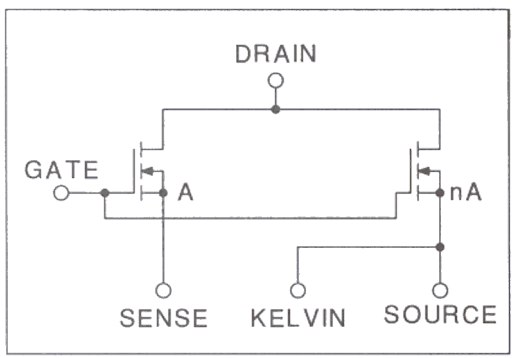

Figure 30 - An equivalent representation of a sense-FET as a small device in parallel with a well matched but much larger unit.

Two of the most common approaches to using sense-FETs for current sensing are illustrated in Figure 31. While circuit (a) appears very simple, it points out an important limitation in the use of sense-FETs in that for the current ratio to hold accurately, the voltage on both sources must not differ by much more than 2-300 mV. This puts a low maximum value on the voltage across Rs which, in turn, imposes some restrictions on the allowable input offset voltage for the comparator. It also illustrates the importance of the Kelvin contact to isolate this low threshold from voltage drops in the power ground line.

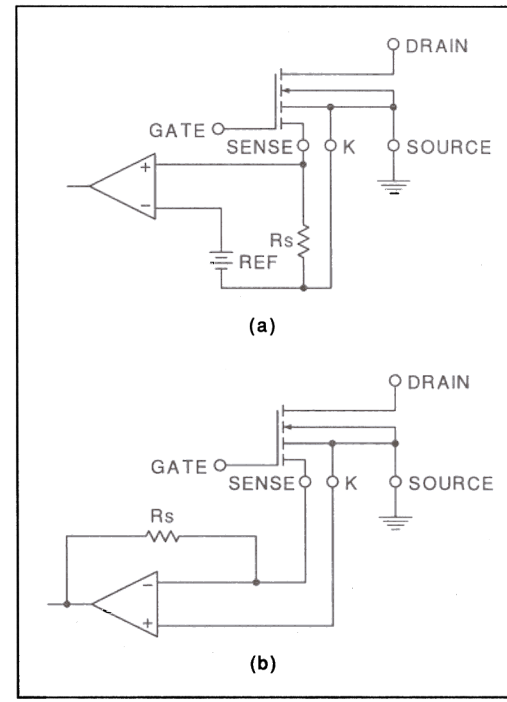

Figure 31 - Two circuit approaches for utilizing sense-FETs.

An alternative approach is to use a forcing amplifier to hold the sensing source pin at a virtual ground potential as shown with circuit (b). While much more accurate, this circuit yields a negative voltage for the current signal, possibly creating further complications. While appearing to be a useful current sensing solution, the widespread usage of sense-FETs has been impeded by their limited availability and higher cost. For further details, reference should be made to the manufacturer's application information. [17]

CIRCUIT TOPOLOGY ISSUES

LOCATIONS FOR SENSING CURRENT

Non-Isolated Switching Regulator Circuits

In picking the location for a current sensing element an obvious first consideration should be to make sure that the circuit branch selected contains the information desired. For example, in a PWM regulator, the current in the power switch is not the same as the average current in the load, and while it

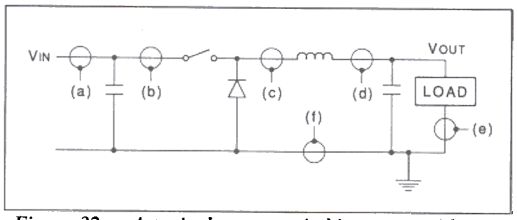

Figure 32 - A typical power switching stage with possible current sense locations.

might be easier to sense the current in the lower switch of a half-bridge topology, this location may not provide output short circuit protection. Beyond this, several possible locations for current sensing in a power switching stage are shown in Figure 32 , and the considerations, pro and con, are discussed below:

Location (a) - The current here, and in the return line, is total input current - both DC and ripple. It is fine for input power calculations and power factor control, but the DC requires a resistor sense. The high side location is good for short circuit protection but does require a high common-mode input to the sensing circuitry.

Location (b) - This is switch current and a transformer is acceptable due to the pulsing current waveform. While there is a high common-mode voltage here, at least it is as steady as the input voltage. This is a good location for both peak current-mode control and overall short-circuit protection.

Location (c) - This branch will yield average load or inductor current but it is probably the worst place for sensing due to the widely-swinging common-mode voltage - from below ground to the input voltage.

Location (d) - The voltage range at this point is stabilized by the output voltage but the common-mode capability must also include ground for startup and short-circuit conditions. This is the ideal location for average current-mode control as the current is both instantaneous inductor current and average load current. The DC value precludes the use of transformer sensing.

Location (e) - This branch, of course, is true load current and the low common-mode voltage makes sensing easier, however, short-circuit protection is not possible. The issues here relate to grounding. If the system ground is as shown, the voltage drop across the sensing element will subtract from the load voltage and regulation will be affected. Also the ability to parallel power supplies to a common load will be degraded. This is a popular location where the load might be a battery as both charging and discharge currents can be monitored with dual-polarity sensing.

Location (f) - Here the problems relate to separating the load ground from the input. Now paralleling loads is practical but multiple power supplies cannot be driven from the same source voltage, and the polarity of the current sense signal is negative with respect to load ground.

Transformer-Coupled Power Stages

The schematics shown in Figure 33 offer several alternatives for current sensing strategies in higher power applications. While full-bridge circuits are shown, it should be fairly easy to extrapolate to half-bridge, push-pull, and two-switch forward and fly-back topologies. In these cases, current sensing transformers are often preferable and justifiable over resistive sensing, both to save the power loss in a resistor shunt and to use the transformer's isolation to allow level shifting from the high-voltage rail down to low-voltage controls. The distinctions between these circuits are described below:

Circuit (a) - If resistive sensing is proposed, this is probably the most practical solution as the voltage levels are referenced to ground. There is a cautionary point to be made, however, in that if direct ground-referenced gate drive circuitry is used to drive the lower FET switches, the transient gate currents through the gate-source capacitance will show up in the current sensing circuitry, perhaps requiring extra filtering or blanking. This problem often dictates the use of gate-drive transformers which can be connected directly from gate to source, bypassing the current sensor.

Circuit (b) - This circuit suffers from the same gate-drive issue as Circuit A but, in addition, the use of a

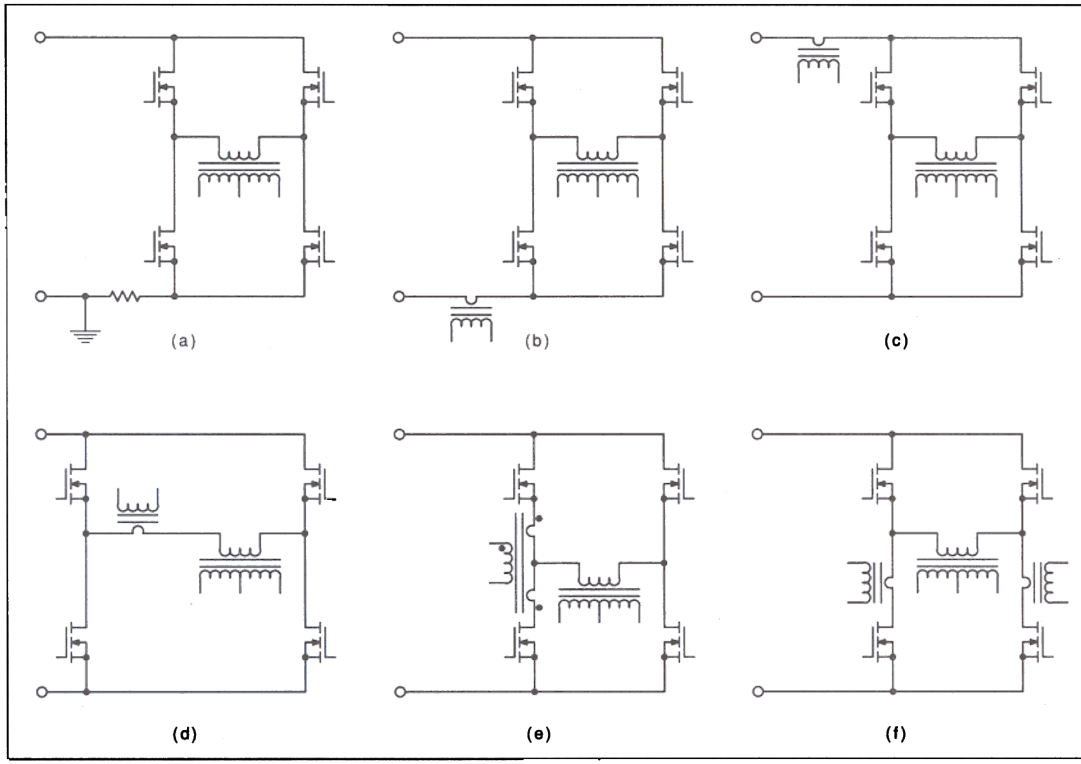

Figure 33 Various current sensing possibilities with higher power topologies.

transformer in this location (and in Circuit C following) there is added concern in keeping the transformer from saturating with the uni-directional current pulses. While this location is in series with the switches, there are two paths for current flow which alternate and the only time allotted for resetting the core is the deadband when all four switches are off.

Circuit (c) - No gate drive problems but the potential for saturation.

Circuit (d) - This would appear to be an ideal application for a current transformer as it will measure true load current (reflected to the primary side) and the current in the sensing circuitry alternates polarity with each half cycle. Again, a cautionary note - if there are any unbalances in the two sides of the bridge, a net DC current could flow in the center leg potentially saturating the current transformer (and the output power transformer). As a result, a series blocking capacitor is often added to this circuit.

Circuit (e) - This circuit uses two sensing primaries on a common core which alternate to allow the development of a uni-polarity signal on the secondary with minimal expense. Since the core is driven in the same direction with each pulse, transformer reset time must still be assured.

Circuit (f) - While this approach bears the cost of two current transformers, it frees the circuit from all the problems described above. The two secondaries can be paralleled for a uni-polarity output.

Obtaining DC Average Current with Current Sense Transformers

Two Alternating Current Sense Transformers Recognizing that a current sense transformer requires reset time, its use in power supplies must be to sense

"switched" current which is typically not the same as the "average" current delivered to the load. One way around this limitation is to use two sensing transformers as shown in Figure 34, where one is placed to measure the current in the power switch and the other senses current in the free-wheeling diode which flows when the switch is off. By summing their outputs as shown in the figure, a true inductor current signal is constructed which is accurate both in waveform and in DC (or average) value.

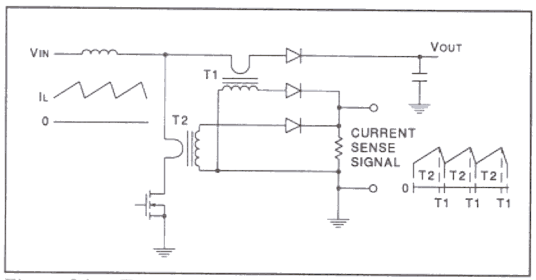

Figure 34 - Two current sensing transformers can be used to measure a DC inductor current by summing the switched waveform in both the switch and diode.

Synthesizing Current Information - The measurement of current has become more important as the use of this information has gone past fault protection to become a part of the regulating control loop. Even with peak current-mode control, the current signal could be obtained from a measurement of switch current which could readily be done with either sensing resistors or current transformers. However, as the dynamic regulation demands have become more stringent, average current-mode control has become a more practical algorithm. With average current-mode control, the complete current waveform in the power inductor must be known, and with continuous inductor current, conventional current transformers were no longer applicable. This becomes even more of a problem in isolated supplies where the inductor would be on the secondary while the controller resides on the primary side.

A variety of solutions have been developed over the years to combat this problem. Most of them take the general form shown in Figure 35 where the waveform of the current in the output inductor is replicated as a voltage waveform on a capacitor. Properly done, this voltage waveform can accurately follow the inductor current for both DC and AC excursions. A current transformer is still applicable for the charging portion of the waveform while the power switch is conducting. The output from the current transformer is turned into a low-impedance voltage waveform by the action of Rcs in Figure 35, and applied to C2 to give the rising portion of the waveform. When the power pulse is terminated by the action of the PWM control, the current transformer's output goes to zero and the transformer is reset but, during this time, the voltage on C2 discharges through R2, approximating the downslope of inductor current as it delivers current to Co and the load. Note that this application allows the use of a current transformer to sense DC load current on the secondary where the typical higher current levels would make the use of a sense resistor difficult. This could be particularly helpful where sensing for load sharing is required.

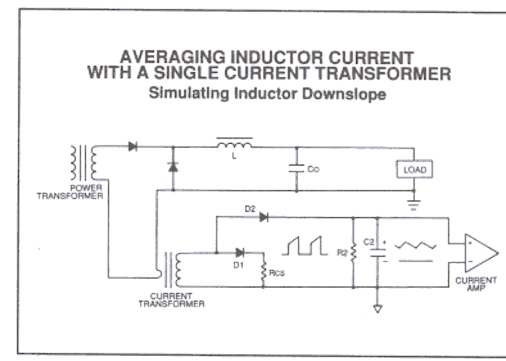

Figure 35 - Generating an average inductor current waveform by simulating the inductor downslope.

A more accurate representation of inductor current is achieved with the circuit of Figure 36 where the downslope is determined directly from the inductor through the use of a second winding on the inductor which generates a constant current discharge of C2. This signal will now be directly related to the regulator's output voltage, even during startup and short circuit conditions. By turning the inductor into a transformer, isolation is achieved with both charge and discharge signals and the current-control circuitry could reside on either side of the isolation boundary. The UC3848 primary-side controller

contains an even more sophisticated version of this current synthesizer. [18]

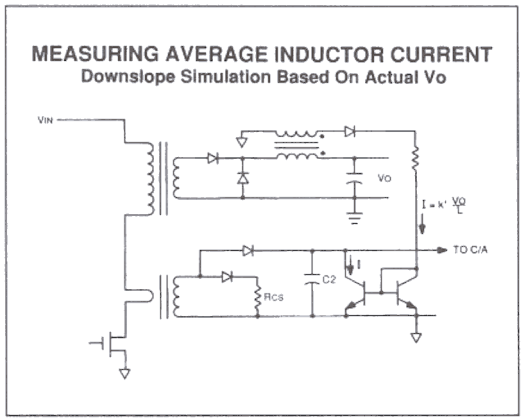

Figure 36 - Measuring average inductor current with the downslope determined from the output voltage.

OTHER CIRCUIT TOPOLOGY ISSUES

"High-Side" Current Sensing

The use of a current sensing resistor in series with either the input or output rail of a power system can present additional problems due to the high common-mode voltage on the sense resistor with respect to ground-based control functions. The usual solution to these problems is the incorporation of a differential level-shifting circuit similar to that shown in Figure 37.

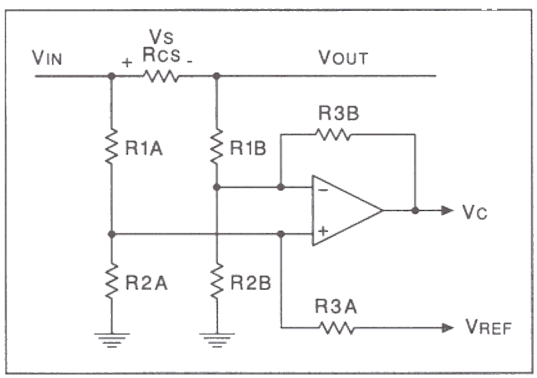

Figure 37 - Level shifting a high-side current sense signal to ground-referenced controllers.

This added amplifier stage is very helpful as it can perform three separate functions as outlined below:

Level Shifting - The resistor dividers of R1/R2 level-shift the differential current sense signal down to a voltage level much closer to ground, allowing the use of an amplifier with an input range less than that of the high voltage rail. While these dividers are selected to keep the maximum voltage within the amplifier's specified range, for startup and short circuit conditions the amplifier's inputs must also be capable of operation at zero voltage.

Differential Amplification - The voltage across the sense resistor must be held low to minimize power loss, but now this circuit will amplify that small differential voltage with a gain determined by the R3/R1 ratio in order to provide an adequate signal level for the sensing threshold of the control circuitry.

Output Signal Referencing - The control circuit processing the current information at Vc may not necessarily accept a zero-voltage signal for a zero-current indication and the use of Vref allows the output of this amplifier to be offset to some higher voltage with respect to ground. Note that Vref could be ground, a DC reference, or it could also be a sinusoidal or other AC waveform reference.

The determination of the nominal values for the circuit components of Figure 37 is quite simple:

The sense resistor value is determined with a knowledge of the maximum short circuit current, Io, and either the sense resistor's power dissipation limit, Pd, or the maximum allowable voltage drop, Vs, as

$$Rcs = \frac{Pd(\max)}{Io(\max)^2}, \quad \text{or alternatively,} \quad Rcs = \frac{Vs(\max)}{Io(\max)}$$

2. The divider R1 / R2 is normally selected by first ignoring the effect of the gain-setting resistor, R3, and using the approximate expression below to insure that amplifier inputs remain below the common-mode limit.

$$\frac{R2}{R1+R2} \leq \frac{Vcm(\text{amplifier max})}{Vo(\max)+Vs(\max)}$$

3. The gain and output offset are then set according

$$Vc(\max) = Vref + \frac{R3}{R1}\left(\frac{1}{Rcs \times Io(\max)}\right)$$

As can be seen in this expression, when Io = 0, Vc = Vref , and then if Io(max) is, for example, the short circuit current limit, then Vc(max) must be the voltage threshold of the shutdown (or other limiting function) of the following control circuitry.

The difficulties with this circuit come in understanding and controlling the sources of potential errors. These are at least five sources for serious error contributions which need to be considered. To illustrate their potential impact, a specific design was analyzed to determine the relationship of amplifier output voltage to component tolerances. The assumed circuit conditions and nominal values are shown in Figure 38 and the errors investigated were the following:

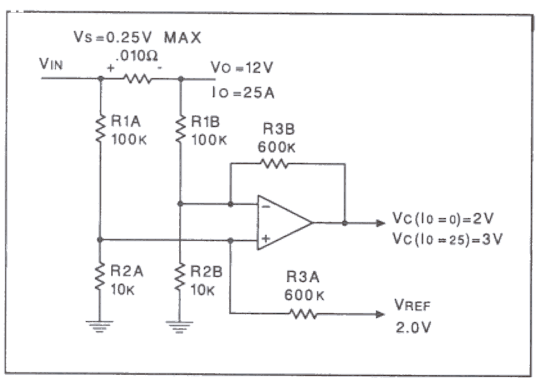

Figure 38 - The impact of component tolerances can be demonstrated with the values for this typical design.

Resistor Matching - While the absolute values of the resistors in this circuit are not critical, the ratios between them are exceedingly so. Since we are looking for millivolt signals and the resistors have substantial voltages across them, minor differences can create significant errors which are graphed in Figure 39(a) and (b). Because of the importance of resistor matching, a common solution is to use ratiometric resistor packs for at least R1 and R2 which, in addition to providing close ratio tolerances, track well over temperature.

Amplifier Offset Voltage - Any input offset voltage will be multiplied by the closed-loop gain of the opamp and result in a DC error at the output, Vc. Note that the offset voltage specification is typically a fixed value so that its contribution to the output error increases as the voltage drop on the sense resistor decreases. For this example, the effect of offset voltage is shown in Figure 39(c).

Amplifier Offset Current - While matching of the resistors will tend to cancel amplifier bias current error, the offset current will be turned into an added offset voltage error by the impedance level at the inputs. Typically, this term is not very significant at impedance levels in the 10 kohm range.

Amplifier Common-Mode Rejection Ratio - As the R1/R2 divider lowers the common-mode voltage, it also lowers the range of input voltage applied to the amplifier's inputs but, as with the offset voltage, its effect is multiplied by the closed-loop gain of this stage. Note that if a high common-mode instrumentation amplifier were to be used - eliminating the need for the R2 resistors - a poor common-mode rejection could introduce significant error.

Resonant Switching

In the ever-expanding search for new power topologies to improve the performance and reduce the cost of power systems, one of the more popular developments has been the use of resonant switching as a means for reducing switching losses in PWM converters. The implication of this technology to current sensing is not a major issue but designers need be aware that in order to get resonant transitions, there are circulating currents which continue to flow in the primary circuitry during the time a conventional power switching stage would be non-conductive. A good illustration of this is the phase-shift controlled, bridge topology shown in Figure 40. [19]

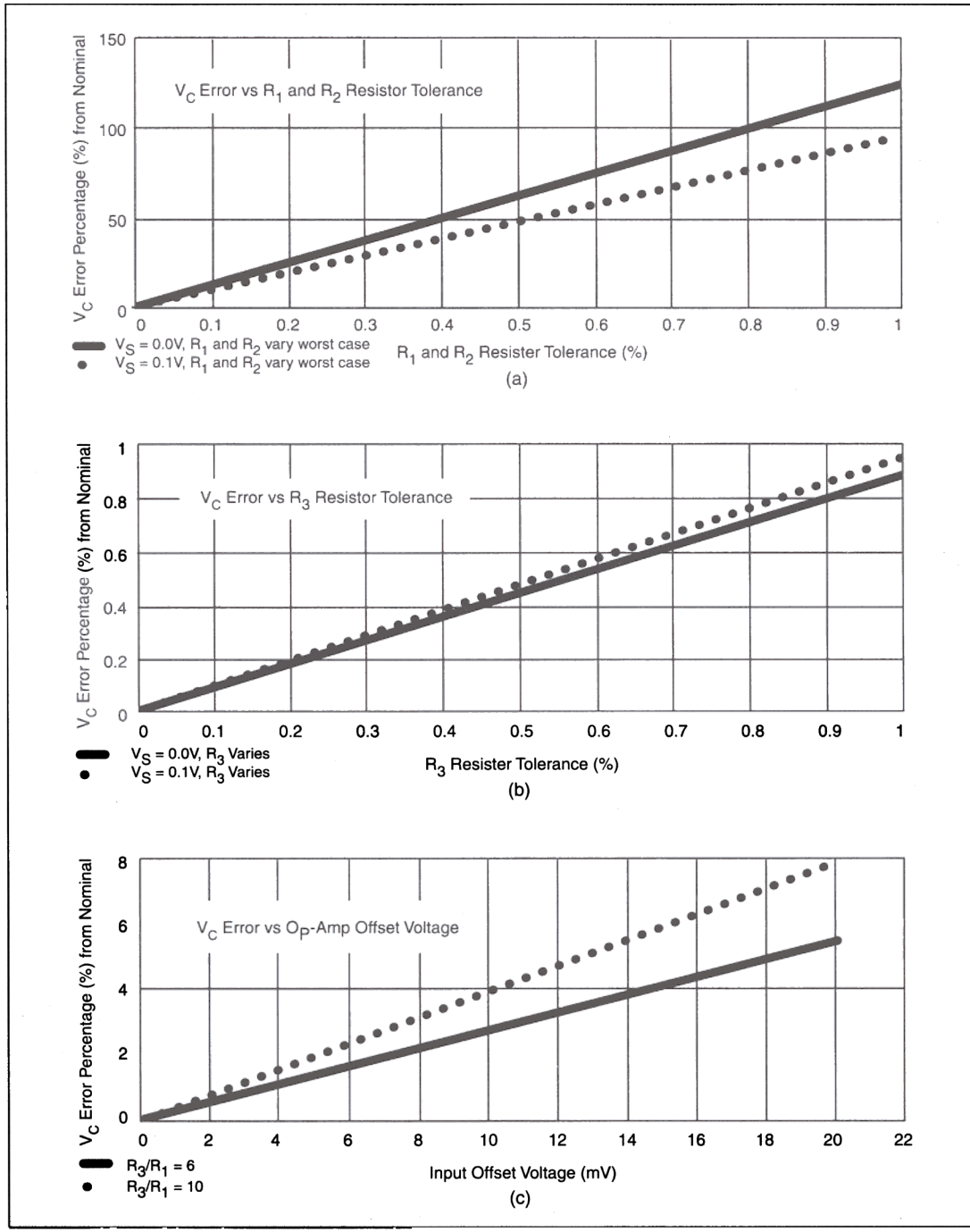

Figure 39 - These curves show the relationship of the amplifier's output voltage accuracy to the tolerances of the circuit parameters.

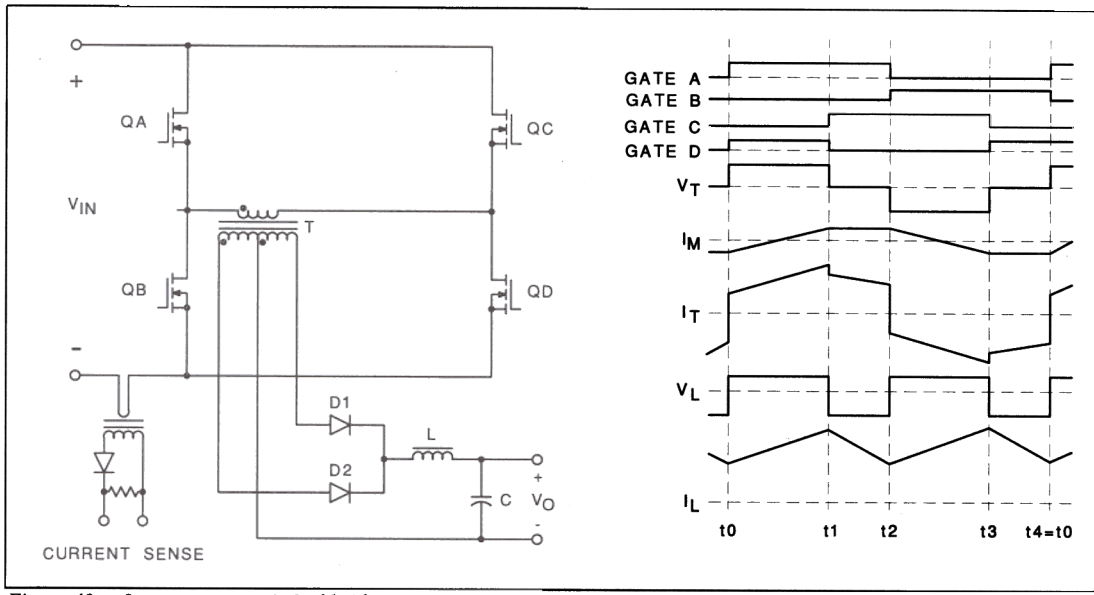

Figure 40 - In a resonant-switched bridge circuit, current sensing must be moved away from the power switches.

An examination of the primary current waveform, IT, shows current flowing in the power devices even when nothing is being delivered to the output inductor. As a result, primary-side load current must be monitored in one of the power rails, as shown in the figure.

Another example where resonant switching requires special current sensing considerations is the Zero-Voltage Switched, boost converter particularly applicable to high power PFC preregulators. In this case, the resonant currents flow in the boost inductor,

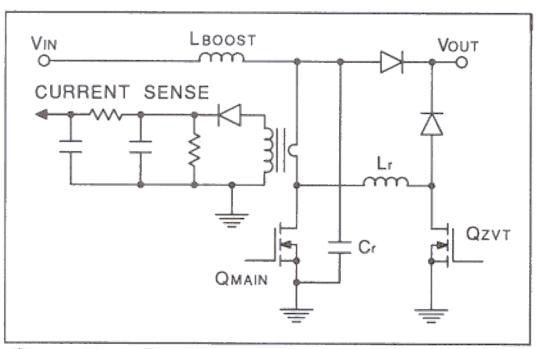

Figure 41 - This circuit, recommended for the UC3855 PFC Controller, insures that the current transformer will measure the resonant current as well as that through the main power switch.

even when the power switch is off, and thus need to be included in the measurement system. The schematic of Figure 41 is recommended for use with the UC3855 PFC Controller so that as the auxiliary switch turns on - prior to activating the main power switch - current through both the resonating inductor and capacitor, as well as that in the power switch, will flow through the current sensing transformer. [20]

CURRENT LIMIT PROTECTION

Having spent a considerable portion of this paper discussing the measurement of current, it would now seem appropriate to address some of the uses to which this information would be put. And, of course, high on this list should be current limit or overload protection for power supplies. While most everyone recognizes the need for short circuit protection, there are many potential strategies to consider for its accomplishment and the following information should help to place these in perspective.

Current Limiting

Constant Current Limiting - One of the most obvious approaches to overload protection is to invoke a constant current limit at a definable threshold. This changes the power supply's output from a voltage to a current source and would provide the same protec-

tion whether the fault was a minor overload or a dead short. The implementation of constant current limiting is typically done with a two-loop control system as shown in Figure 42. This diagram shows two feedback amplifiers, one for voltage and one for current. They each use a voltage source as a reference but the action of the current amplifier is to regulate the voltage across the current sense resistor, thereby regulating the current. The operation of the circuit is that when the current is less than the limit threshold, that amplifier is inactive and the voltage amplifier is in control. When the current tries to exceed the limit value, the current amplifier takes over and the voltage amplifier is disabled. This approach can be used in either linear or switching topologies with the only difference being whether there is a pulse-width modulator in the driver and power stage following the amplifiers. Note that it is load current that is being monitored in the circuit shown, not internal switch current, so the next few waveforms do not apply to current-mode controlled applications.

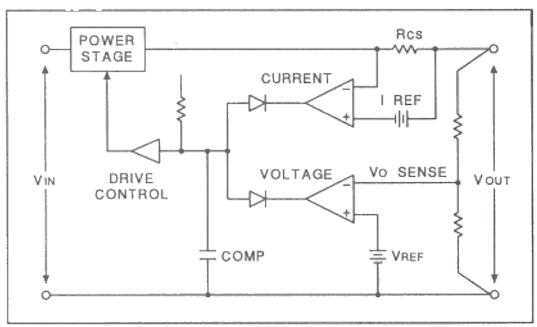

Figure 42 - Constant current limiting uses a two-loop analog control.

This form of protection is typically favored by the power supply user because he always knows what to expect and it is easy to interface to a variety of load characteristics. The supply, on the other hand, is often not very comfortable with this strategy as an output short can result in higher than normal internal power dissipation. The characteristics of a constant current limited power supply are shown in Figure 43 where it can be seen that at all currents below the threshold, the supply provides a constant output voltage. When the load - for whatever reason - exceeds the current limit, Isc, then the output voltage falls to

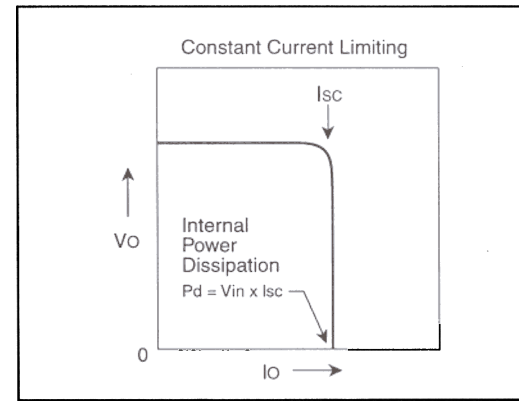

Figure 43 - Output characteristics of a constant current limited power supply.

whatever it takes to keep the current constant. With a shorted output, the output voltage is of course, zero and a linear regulator in this mode will experience its maximum internal dissipation as it is supporting the entire input voltage while simultaneously conducting the maximum output current. This can often make the thermal management problem in the fault mode several times more difficult than when the regulator is operating with normal loads.

Foldback Current Limiting - In an effort to ease the fault power dissipation problem, power supply designers found ways to reduce the level of the maximum current allowable as a function of the amount of overload. This characteristic is called "foldback" for reasons which are obviously seen in the characteristic

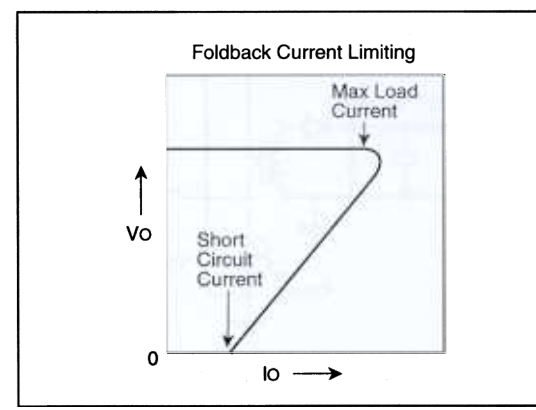

Figure 44 A power supply with foldback current limiting.

shown in Figure 44. With foldback current limiting, the power supply behaves normally at current levels up to where current limiting starts to kick in. At this point, the output voltage begins to fall and, as it does, the current limit value is also reduced until, when the output is completely shorted, the available current has been reduced to 20-30% of the normal maximum load value. So as the output voltage falls - increasing the internal voltage drop - the current is reduced and the power dissipated within the unit is, if not constant, at least much more manageable.

The implementation of foldback current limiting is usually based upon modifying the current limit threshold as a function of a voltage measurement which changes as the supply goes into current limiting. There are at least two common approaches to this, which are shown in Figure 45. In schematic (a), the current limit is reduced with increasing (Vin - Vout), while in (b), a falling Vout reduces the current. Approximate equations for each case are given which define the output current limit value as a function of the changing voltage levels.

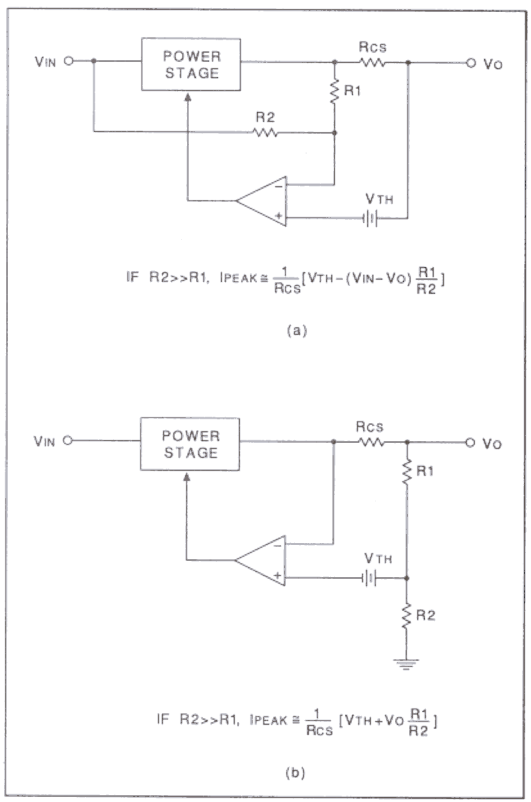

Figure 45 - The current limit value can be made to vary with either Vout or (Vin - Vout).

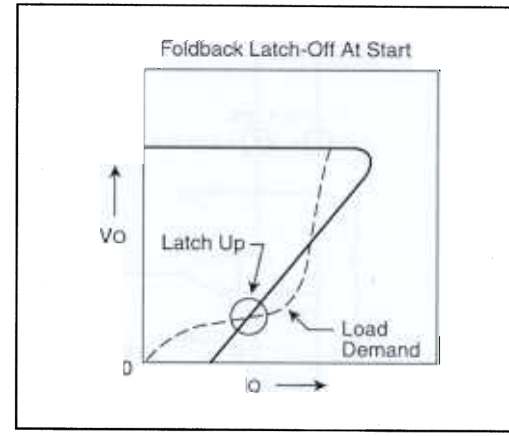

Figure 46 - A problem with foldback is the possibility for latch up when starting.

While foldback current limiting has made the life of the power supply designer much easier, the user now has to be much more concerned as to the nature of his load. The problem is that most "real world" loads are not just resistive, particularly at startup or when recovering from an overload. Figure 46 illustrates a not uncommon situation where, as voltage is applied to the load, the current increases in a non-linear trajectory. If the static load demands more current than the supply will provide - at any voltage less than the regulated value - the supply can latch up and fail to start. This can be particularly troublesome and

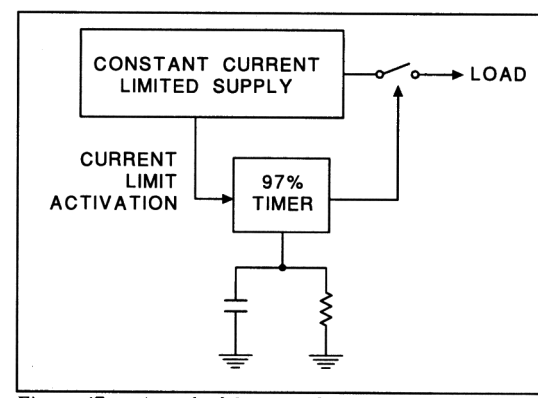

Figure 47 - A method for providing constant current limiting with low average power dissipation.

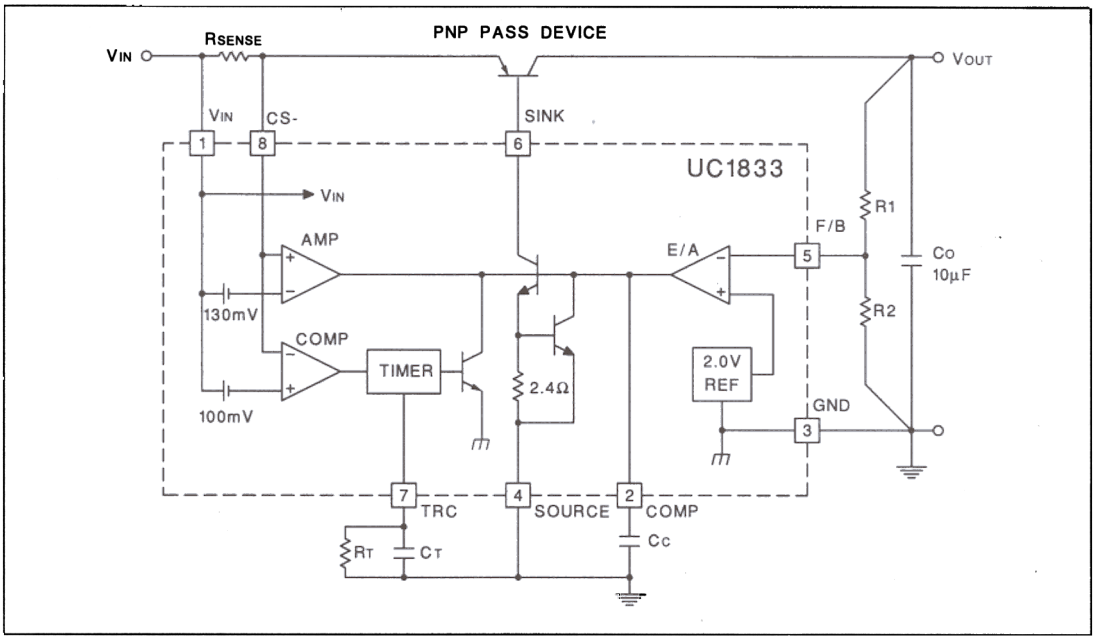

Figure 48 - A duty-cycle current limited linear voltage regulator.

difficult to predict when multiple supplies are used with the potential of interactions between them. One technique for solving this problem is the addition of a time delay to the foldback portion of the circuit in order to let the supply start with constant current limiting and then apply foldback if a fault lasts longer than the expected startup transient.

Duty-Cycle Current Limiting - Another method for providing current limiting with low internal power dissipation is to combine constant current limiting with a low duty-cycle interruption circuit as shown in Figure 47. [21] The idea here is that under a fault condition the controller will allow conduction for only a short interval and then shut down for substantially longer time (typically 3% on and 97% off). Under these conditions, even though the peak power may be high, the average is a fraction of that value.

A diagram showing a typical implementation of this type of fault management is shown in Figure 48 where it is applied to a linear voltage regulator. Note that the current sense signal is used in both an analog loop to regulate the fault current, and in a digital form to activate the timer. In addition to power supplies, this type of current limiting has also been successfully applied to self-resetting circuit breaker functions. There is one concern to duty-cycle current limiting, however, in that the circuit has to be designed with a knowledge of the maximum output capacitance expected. Too much capacity could prevent startup under load unless the minimum on-time is set appropriately.

Pulse-by-Pulse Current Limiting - Pulse-width modulating controllers have long used a technique to limit overload by limiting time instead of current. The block diagram of Figure 49 provides an illustration of this technique. The oscillator initiates each output pulse by resetting the PWM latch. Normally, the pulse width is then determined by the ramp waveform rising above the voltage amplifier's output and thus setting the PWM latch and terminating the output pulse. However, through a parallel path to the set terminal of the PWM latch, the output pulse can be terminated prematurely by an overcurrent signal from the current sense comparator. This technique can be very effective and, of course, very easy to implement with switching power supplies, however two consid-

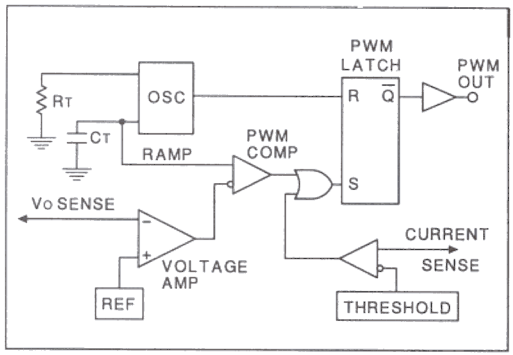

Figure 49 - Pulse-by-Pulse current limiting with a PWM controlled switching regulator.

erations must be kept in mind: First, since there is no analog current limiting, only residual circuit inductance limits the rise in current from a hard short during the delay it takes for the current loop to react, and secondly, in a continuous fault condition, the power stage will continue pulsing although, hopefully, with very narrow pulses.

Current-Mode Peak Current Limiting - Pulse-by-pulse limiting is even easier with peak current-mode control, as shown in Figure 50, because a clamp on the output of the voltage error amplifier is all that is needed to limit the maximum current in the sensing circuit. The basic operation of this topology is to terminate each power pulse when the current builds to a level established by the error amplifier and clamping the amplifier's swing therefore clamps the peak current. There is a distinction which needs to be made here in that with peak current-mode control, it is the *peak inductor* current which is controlled, while the load sees the *average* value, and there can be a substantial difference between these levels - particularly as the pulse width is reduced to a small value. Since each pulse starts afresh by turning on the power switch, and that switch can't begin to turn off until the current loop has sensed its peak threshold, the delay time of the turn-off function will result in a minimum controllable pulse width. This can impact the protection function by allowing continuous narrow pulses to "walk" the inductor up the B-H curve toward saturation. This occurs because inductor current in the typical step-down power supply ramps up according to (Vin - Vout), and down with only Vout. Therefore, a falling output voltage from an overload can diminish the ability to completely "reset" the inductor with each pulse and the net result is an increasing current with increasing overload. Preventing this usually means insuring that the inductor's on-time volt-seconds stays less than the volt-seconds for reset during the off-time. While this would appear difficult with a direct short circuit on the output, the fact that the output rectifier voltage is still present may provide adequate reset voltage to prevent saturation - at least for power supplies with low regulated output voltages. A more positive solution is to increase the off-time as the supply's output voltage falls (due to an overload) by lowering the switching frequency in a way that insures both adequate reset time for the transformer and a low average current to the fault. This technique is called "Frequency Foldback" and is implemented in the UCC3884 Advanced Current-Mode Controller.

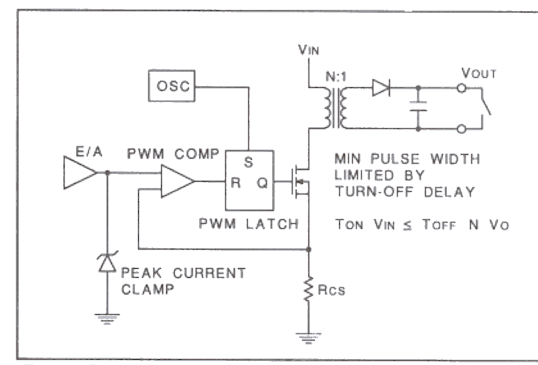

Figure 50 - Current-mode control makes peak current limiting easily accomplished.

Over-Current Shutdown

An alternate protection strategy to continuous operation in a fault mode with the current (hopefully) under control, is just to shut down the power supply when a fault is sensed. Within this strategy, there are still at least two options: Shutdown followed by an automatic restart, or latch off with the requirement for a manual restart from an operator by, for example, recycling input power. Shutting down the supply - regardless of whether it is temporary or permanent - still has many possibilities for its implementation.

Soft-Start Hiccup Protection - Most switching supplies - and some linears as well - have in their control circuitry a startup time constant (relatively long in comparison to the switching frequency) which can be exercised to recycle in the event of a fault. The primary purpose of this time constant is to allow a slow turn-on (soft-start) to minimize startup transients, however, it obviously will also be useful in startup after a fault shutdown. The usual approach is to provide two levels of current sensing by monitoring the current waveform with two comparators with different thresholds. The lower threshold invokes pulse-by-pulse current limiting allowing the circuit to continue to operate through a minor overload. The second comparator, with a higher threshold, sets a latch which discharges the soft-start capacitor and thereby reduces the output pulse width to zero. Resetting the latch then allows the circuit to initiate another slow startup. If the system is set up to automatically reset the latch when the soft-start capacitor is fully discharged, the operation is called "hiccup" protection because, with a continuous fault, the circuit will allow a short burst of high-frequency pulses as the system tries to start, separated by relatively long periods while the soft-start capacitor is being discharged and then slowly recharged. Although this will continue as long as the fault is present, the average power should be much less than with pulse-by-pulse current limiting.

A simple implementation of hiccup fault protection is possible with any PWM control circuit which has a low-current startup mode. This is shown in Figure 51 where the action is defined by the control circuit power source. R(start) is made so large that, while current through it will start the circuit, it is inadequate to maintain continuous operation, and that energy is derived from a secondary winding on the output inductor. The polarity is such that this auxiliary winding delivers Vout (times the turns ratio) to supply Vcc to the control circuit so, when Vo is shorted, Vcc will fall, eventually forcing the controller to stop, at which time a restart is initiated. The hiccup time constant is then established by the energy storage capacitor, Cc.

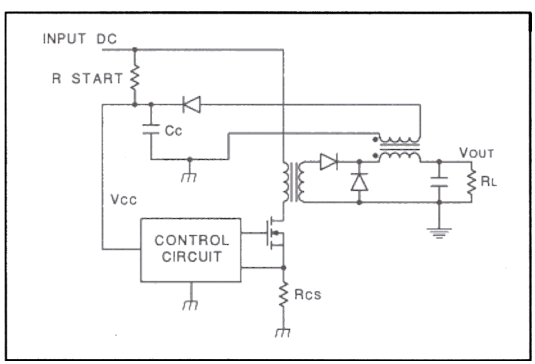

Figure 51 - Using energy from the output inductor to supply the control circuit can automatically provide hiccup fault protection.

Delayed Shutdown - A problem with using two different current thresholds to make the decision as to whether the circuit goes into current limiting or a shutdown mode, is that a fast fault transient may go through both thresholds before the controller can react. One technique used to minimize what might be nuisance shutdowns is to provide a time delay before allowing the higher threshold to initiate shutdown, however that can cause concerns as to how fast the circuit will react to a major short. The control circuitry developed for the UCC3570 attempts to solve this issue by providing three levels of protection. (See Figure 52) The first is pulse-by-pulse current limiting which occurs at a threshold of 200mV and merely reduces the normal pulse width under overload. The second is a shutdown signal but at a significantly higher threshold - 600mV. This will react quickly in the event of a serious fault. The third level

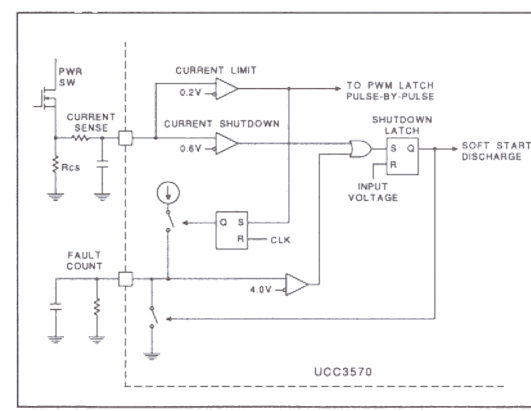

Figure 52 - The UCC3570 provides three levels of overcurrent protection.

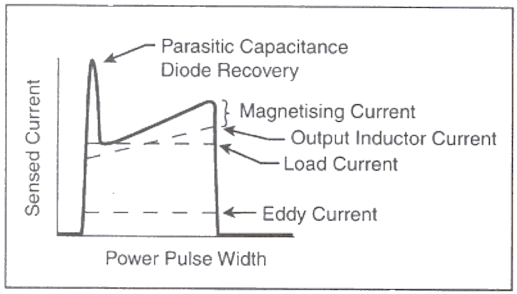

Figure 53 - A typical current waveform on the primary side of an isolated power supply.

is to count the current limiting signals to allow a finite time in current limiting, and then shut down. This will allow the supply to ride through some period of overload, but not permit continuous operation in a fault condition.

CURRENT CONTROL

Sensed Current Waveform

Increasingly, current information in a power supply is being used for more than merely fault protection. The most obvious example is in the widespread use of current-mode control as the overall control algorithm for the normal operation of the power supply. In this mode, more information than just the peak value of the current is required - the complete waveform is important and waveform fidelity can become an issue. When sensing current, it is important to understand all that is contained within the waveform observed. Figure 53 attempts to illustrate the components of a primary-side switched current as the sum of the output inductor current, and the power transformer's magnetizing current and eddy current losses. (The actual load current is the average of the inductor ripple current.) When implementing peak current-mode control, it is helpful to know that the transformer's magnetizing current increases the slope of the current signal, and thus contributes to the normally-required slope compensation.

Another important but not so beneficial component of the current waveform is the leading-edge spike caused by parasitic capacitance in the power switch, interwinding capacitance in the power transformer, and recovery current from the output rectifiers. It is easy to see that this spike needs to be isolated from any fault sensing circuitry and Figure

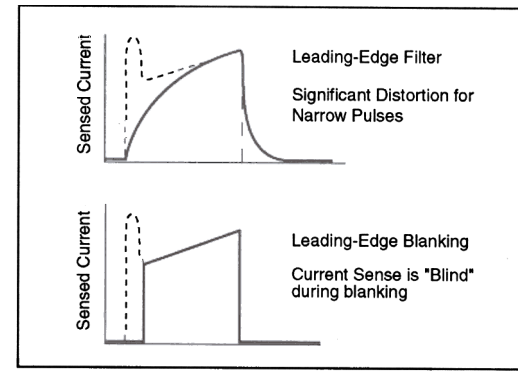

Figure 54 - Two methods for combating the leading-edge current waveform spike, and the problems associated with each.

54 shows two commonly used techniques. However, as noted in the illustrations, both of these must be applied with some care as too much low-pass filtering will distort the waveform while leading-edge blanking allows for an uncontrollable minimum pulse width.

Current Control Applications

Current-Mode Control - Figures 55 and 56 are included merely to illustrate the simplified architectural differences between peak and average current-mode control. In peak mode, the waveforms are very important for reasons described above. With average current-mode control, the added gain of the current amplifier and the integration, or averaging, of the

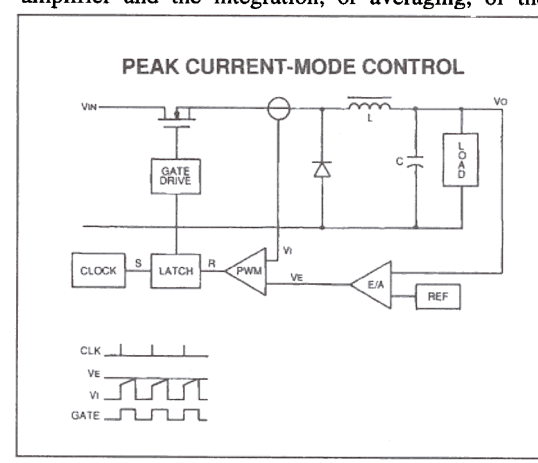

Figure 55 - Peak current-mode control architecture normally senses switch current.

current signal helps to make this topology substantially more forgiving. Note that peak C/M senses switch current, allowing the easy application of current sensing transformers, while average C/M looks at inductor current and thus needs a DC current sensing scheme. [22]

Power Factor Correction - In a typical high power factor boost preregulator, as shown in Figure 57, current sensing performs several important functions. The high frequency ripple waveform provides for stable operation of the PWM controller, the average low frequency signal insures that the input waveform follow that of the AC line voltage, and, although not shown in the figure, peak current control also provides protection for the power switch. In addition to sensing steady-state current, the circuit must also

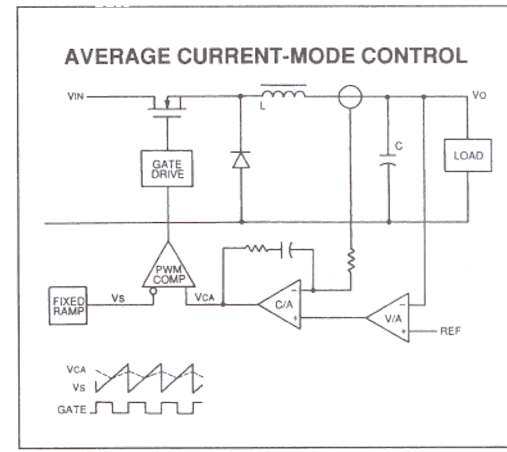

Figure 56 - Average current-mode control adds a current amplifier and needs DC current sensing.

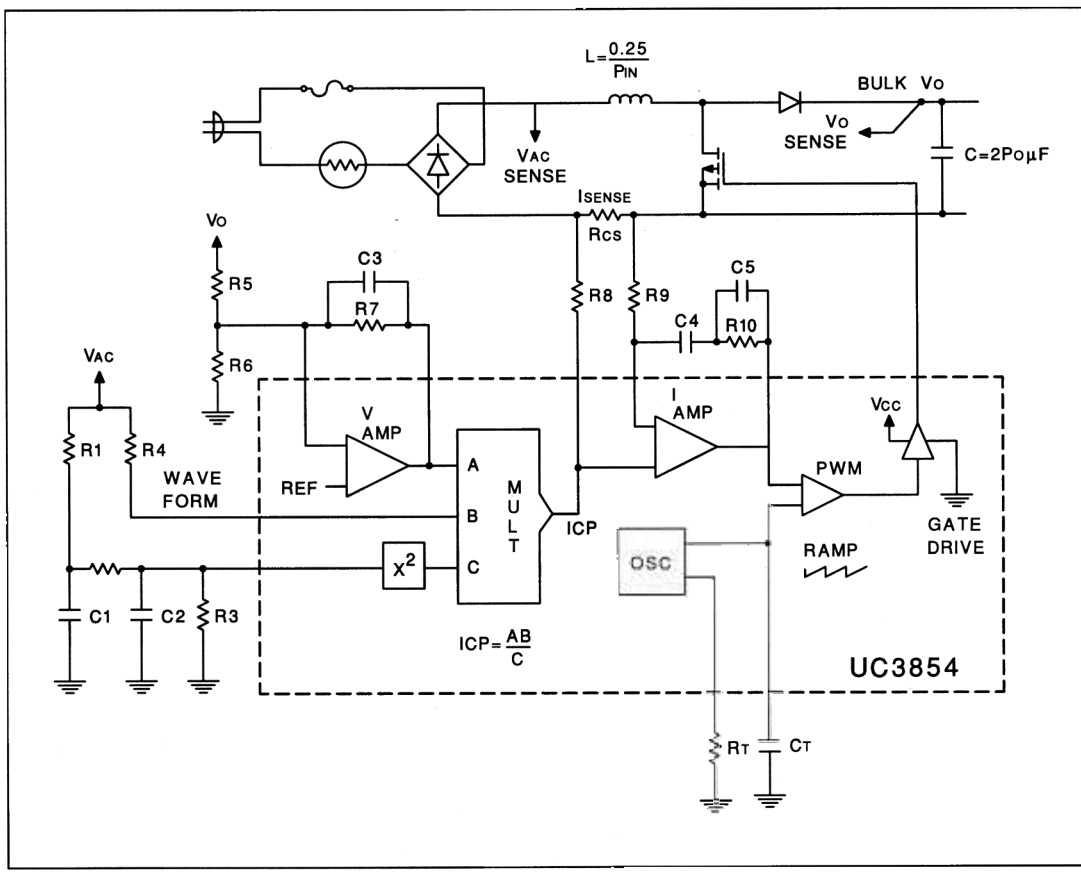

Figure 57 - Average current-mode gives the best performance in a PFC controller.

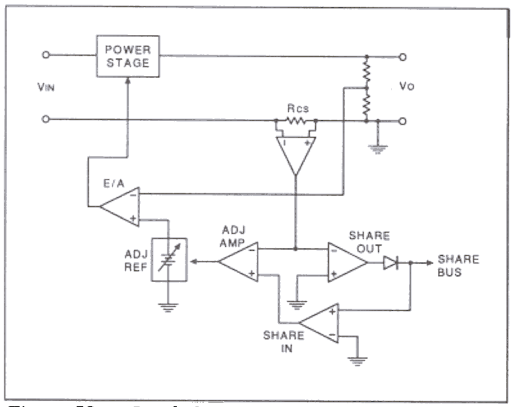

Figure 58 - Load sharing circuitry to allow multiple power modules to be paralleled.

follow the zero crossings where the PWM command attempts to go to 100% duty cycle. [23]

Load Sharing - Figure 58 illustrates a simplified approach to adding load sharing to a power supply's control to allow reliable paralleling of multiple power modules. In this circuit, the DC output current is sensed and a voltage proportional to that value sent out on a share bus to other modules intended to feed the same load. The voltage on the share bus is then used to adjust the reference voltage level in each module that individual outputs such that they each supply an equal contribution to the total load current. [21]

ACKNOWLEDGMENTS

Significant contributions to this topic were made by many individuals and the editor would specifically wish to recognize the participation of Bill Andreycak, Jim Noon, and Larry Spaziani of the Unitrode Application Engineering Department for the material which they provided. Helpful references and a more complete understanding of the magnetic structures were the result of conversations with Lloyd Dixon of Unitrode and Rudy Severns of Springtime Enterprises. In addition, Sam Davis, Editor of PCIM Magazine, contributed several references from his archives which were appropriate to this subject. Finally, the cooperation from the many venders who supply products applicable to current sensing, and shared their information for this writing, has also helped to provide a much broader prospective and a more thorough presentation. For all these contributions the author - and, one hopes, our readers - are sincerely grateful.

BIBLIOGRAPHY

[1] Spaziani, Larry, "Using Copper PCB Etch for Low Value Resistance", Unitrode Design Note DN-71.

[2] MIL-STD-275E, "Printed Wiring for Electronic Circuits", DOD Publication, Dec 31, 1984.

[3] Pacholok, D.R., "Novel Current-Sense Technique Boosts Converter Efficiency", PCIM Magazine, July, 1990.

[4] Ray, W.F. and Davis, R.M., "Wideband AC Current Transducer Measures High Current", PCIM Magazine, September, 1994.

[5] Bertsche, K.J., "A Modified Rogowski Coil for Measurements of Hybrid Permanent Magnets", FERMILAB Conference Proceedings, 1996.

[6] Waters, C., "Current Transformers Provide Accurate, Isolated Measurements", PCIM Magazine, December, 1986.

[7] Billings, K.H., "Switchmode Power Supply Handbook", McGraw-Hill, Inc., 1989.

[8] Williams, B.W., "Power Electronics", McGraw-Hill, Inc., 1992.

[9] Gytri, A. and Undeland, T.M., "Low Cost DC and AC Current Transducer with Isolation and Good Linearity", PCI Conference Proceedings, March, 1982.

[10] Storm, H.F., "Magnetic Amplifiers", Wiley and Sons, 1955.

[11] Severns, R., "Improving and Simplifying High Frequency DC Current Sensors", IEEE APEC Conference, 1986.

[12] Houldsworth, J.A., "Purpose-Designed Ferrite Toroids for Isolated Current Measurements in Power Electronic Equipment", Signetics Application Note.

[13] Emerald, P. and Gilbert, J., "Introduction, Theory, and Fundamentals of Hall Effect Sensors and Transducers", PCIM Conference, September, 1995.

[14] Rippel, W.E., "A High Performance, Integrable Current Sensor", PCI Conference Proceedings, September, 1987.

[15] Drafts, Bill, "Current Sensing Solutions for Power Conversion and Intelligent Motion Applications", PCIM Magazine, September, 1995.

[16] Carrasco, J.A., et al, "Improved Magnetic Coupled Current Sensing Techniques", IEEE APEC Conference, 1996.

[17] Clemente, Ishii, and Young, "An Introduction to the HEXSense Current Sensing Device", International Rectifier Application Note AN-959.

[18] O'Connor, J.A., "The UC3848 Average Current Mode Controller Squeezes Maximum Performance from Single Switch Converters", Unitrode Application Note U-135.

[19] Andreycak, Bill, "Phase-Shifted, Zero-Voltage Transition Design Considerations and the UC3875 PWM Controller", Unitrode Application Note U-136.

[20] Noon, J.P., "Analysis and Design of a 250kHz, 500W Power Factor Correction Circuit Employing Zero Voltage Transitions", Unitrode Application Note U-153.

[21] Mammano and Rodovski, "A New Linear Regulator Features Switch-Mode Over Current Protection", Unitrode Application Note U-116.

[22] Dixon, Lloyd, "Average Current Mode Control of Switching Power Supplies", Unitrode Application Note U-140.

[23] Todd, Phil, "UC3854 Controlled Power Factor Correction Circuit Design", Unitrode Application Note U-134.

[24] Jordan, Mark, "UC3907 Load Share IC Simplifies Parallel Power Supply Design", Unitrode Application Note U-129.

IMPORTANT NOTICE

Texas Instruments and its subsidiaries (TI) reserve the right to make changes to their products or to discontinue any product or service without notice, and advise customers to obtain the latest version of relevant information to verify, before placing orders, that information being relied on is current and complete. All products are sold subject to the terms and conditions of sale supplied at the time of order acknowledgment, including those pertaining to warranty, patent infringement, and limitation of liability.

TI warrants performance of its products to the specifications applicable at the time of sale in accordance with TI's standard warranty. Testing and other quality control techniques are utilized to the extent TI deems necessary to support this warranty. Specific testing of all parameters of each device is not necessarily performed, except those mandated by government requirements.

Customers are responsible for their applications using TI components.

In order to minimize risks associated with the customer's applications, adequate design and operating safeguards must be provided by the customer to minimize inherent or procedural hazards.

TI assumes no liability for applications assistance or customer product design. TI does not warrant or represent that any license, either express or implied, is granted under any patent right, copyright, mask work right, or other intellectual property right of TI covering or relating to any combination, machine, or process in which such products or services might be or are used. TI's publication of information regarding any third party's products or services does not constitute TI's approval, license, warranty or endorsement thereof.

Reproduction of information in TI data books or data sheets is permissible only if reproduction is without alteration and is accompanied by all associated warranties, conditions, limitations and notices. Representation or reproduction of this information with alteration voids all warranties provided for an associated TI product or service, is an unfair and deceptive business practice, and TI is not responsible nor liable for any such use.

Resale of TI's products or services with *statements different from or beyond the parameters* stated by TI for that product or service voids all express and any implied warranties for the associated TI product or service, is an unfair and deceptive business practice, and TI is not responsible nor liable for any such use.

Also see: Standard Terms and Conditions of Sale for Semiconductor Products. www.ti.com/sc/docs/stdterms.htm

Mailing Address:

Texas Instruments
Post Office Box 655303
Dallas, Texas 75265

Copyright © 2001, Texas Instruments Incorporated